وزارة التعليم العالي والبحث العلمي
الجامعة التقنية الشمالية
اسم التشكيل :- المعهد التقني الدور

الحقيبة التعليمية

قسم التقنيات الالكترونية

اسم المقرر:	الانصالات 1
المرحلة / المستوى:	الثاني
الفصل الدراسي:	الاول
السنة الدراسية:	2025/2024



معلومات عامة

اسم المقرر:	الاتصالات					
القسم:	التقنيات الالكترونية					
الكلية: المعهد	المعهد التقني الدور					
المرحلة / المستوى	الثاني					
الفصل الدراسي:	الاول					
عدد الساعات الاسبوعية:	نظري	2	عملي		2	
عدد الوحدات الدراسية:	8					
الرمز:	EOTO 213					
نوع المادة	نظري		عملي		كلهما	*
هل يتوفر نظير للمقرر في الاقسام الاخرى	كـلا					
اسم المقرر النظير	-					
القسم	-					
رمز المقرر النظير	-					
معلومات تدريسي المادة						
اسم مدرس (مدرسي) المقرر:	حسن زين العابدين ساقي					
اللقب العلمي:						
سنة الحصول على اللقب						
الشهادة :	مـاجستـير					
سنة الحصول على الشهادة	2022					
عدد سنوات الخبرة (تدريس)	18					

الوصف العام للمقرر

يكتب في هذا الجزء وصفاً عاماً و ملخصاً للمقرر الدراسي :-

الالمام العام بمفهوم الاتصالات التناظرية والرقمية وكيفية معالجة الاشارات وتعرف على الوسط النقل واخذ بنظر الاعتبار جميع المؤثرات الخارجية .

الاهداف العامة

- **التعريف بقوانين الاتصالات التناظرية والرقمية**
- **الالمام بأنواع التضمين لكلا نوعين من الاتصالات**
- **تحليل المسائل وايجاد الفرق بينهما من الناحية النظرية والعملية**

الأهداف الخاصة

- ترتبط بمقرر دراسي معين أو بوحدة دراسية محددة .
- تمتاز بأنها أهداف قصيرة الأمد إلى حد ما ، تحدد بدقة توضح ما يجب أن يتعلمه المتعلم من دراسة مقرر معين أو القيام بنشاط معين .
- تكون صياغة الأهداف التعليمية أكثر تحديداً وتخصيصاً من الأهداف التربوية .
- تصف سولك نوعي يحدد الأداء النهائي الذي يصدر عن المتعلم الذين ينجحون في تعلم السلوك المرغوب .

أمثلة الأهداف التعليمية .

تنمية الملكة الحسابية لدى الطالب لدوائر الاتصالات واكسابه مهارة كيفية حل المشكلات من خلال الفهم وتأهيليه الى تقديم الاستشارة والتطور العلمي لمستوى اكاديمي اعلى.

الأهداف السلوكية او نواتج التعلم

- **ان يدرك الطالب اهمية منظومة الاتصالات كونه يمثل المفاهيم الاساسية لتطور التكنولوجي .**
- **ان يميز الطالب بين الاتصالات التناظرية والاتصالات الرقمية وبيان مدى التوافق والاختلاف بينهما.**
- **ان يكون الطالب قادراً على تقديم الاستشارة بشكل هندسي مع اثبات ذلك بالأدلة والبراهين .**

((أمثلة أهداف تدريسية)) :- بعد الانتهاء من الدرس (المحاضرة) سيكون الطالب قادرا على ان

- يعرف بالقواعد المتعلقة بالتضمين .
- يعرف بالقواعد المتعلقة بالفرقة بين التضمين التناظري والتضمين الرقمي .
- يعرف بخواص الدوائر منظومة الاتصالات لكلا النوعين .
- يعرف بأنواع الاشارات وتأثيرات العوامل الخارجية لها.
- يعرف على الترددات الموجية لمنظومة الاتصالات .

المتطلبات السابقة

- اذكر أي متطلبات سابقة قد يحتاجها الطالب قبل التسجيل في المقرر، مثل مواد دراسية سابقة أو مهارات معينة.
- **شرح انواع مرشح الترددات في الالكترونيات**
- **الوجيز في شرح الحزام والانطاق لترددات في منظومة الاتصالات**
- **الوجيز في شرح انواع منظومة الانصالات التناظرية والرقمية**

الأهداف السلوكية او مخرجات التعليم الأساسية		
ت	تفصيل الهدف السلوكي او مخرج التعليم	آلية التقييم
1	معرفة الطالب انواع منظومة الاتصالات التناظرية والرقمية	• المحاضرات . • الواجبات الفردية والمشاركة . • حلقات النقاش والاختبارات .
2	اكتساب الطالب القدرة على تطبيق القوانين النظرية على الواقع	• البحث وتطوير المهارة من خلال الابحاث وحل القضايا ومتابعتها في المحاكم .
3	القدرة على تقديم الاستشارة الهندسية مع ضرورة اثبات ذلك بالأدلة والبراهين	• مشاريع فردية او جماعية . • اختبارات .
4	معرفة الطالب الفرق بين الترددات والنطاق الترددي	• مشاريع فردية او جماعية . • اختبارات .

أساليب التدريس (حدد مجموعة متنوعة من أساليب التدريس لتناسب احتياجات الطلاب ومحتوى المقرر)

الاسلوب او الطريقة	مبررات الاختيار
1-المحاضرات النظرية والعملية من خلال الشرح	محدد وواضح ويطبق بسهوله وهو التقليدي
2. التعلم التفاعلي والمتبادل	التفاعل بين الطلبة
3. التعلم القائم على الحجج والبراهين	اكتساب الطالب مهارة تفسير النصوص
4. المناقشة في نهاية المحاضرة	تقديم الخلاصة والفهم للموضوع

المقرر الدراسي :- اتصالات (1) المستوى الدراسي الثاني – الفصل الأول

الاسبوع	الساعات	مخرجات التعلم المطلوبة	اسم الموضوع	طريقة التعلم	طريقة التقييم
1	4	المعرفة والتطبيق العملي	المرشحات– مرشحات(RC):(BSF)- (LPF)-(BPF)-(HPF)	عملي + نظري	الاختبارات والتقارير
2	4	المعرفة والتطبيق العملي	المرشحات الفعالة :(BSF)- (LPF)-(HPF)-(BPF	عملي + نظري	الاختبارات والتقارير
3	4	المعرفة والتطبيق العملي	التضمين –معناه –أنواعه—تضمين (AM) تحليل الموجه.	عملي + نظري	الاختبارات والتقارير
4	4	المعرفة والتطبيق العملي	الطيف الترددي-توزيع القدرة – حساب معامل التضمين المكافىء.	عملي + نظري	الاختبارات والتقارير
5	4	المعرفة والتطبيق العملي	أنواع التضمين الاتساع(AM) مع طيفها الترددي	عملي + نظري	الاختبارات والتقارير
6	4	المعرفة والتطبيق العملي	أنواع المضمنات المستخدمة لتوليد (AM) المضمن المتوازن –المضمن الحلقي-مضمن كوين-مضمنات أخرى.	عملي + نظري	الاختبارات والتقارير
7	4	المعرفة والتطبيق العملي	كشف تضمين(AM)– Envelope Detector Synchronous Detector – التشويه في دوائر الكشف – (AGC)	عملي + نظري	الاختبارات والتقارير
8	4	المعرفة والتطبيق العملي	مخطط كتلي لجهاز إرسال واستقبال الموجه المضمنه اتساعيا –معاملات مقارنة اتساعية أجهزة الاستقبال (الحساسية- الانتقائية-الجودة-التشويه).	عملي + نظري	الاختبارات والتقارير
9	4	المعرفة والتطبيق العملي	التضمين الترددي (FM) تضمين (PM)-التحليل الرياضي للموجات المضمنه –نسبة التضمين – الانحراف الترددي.	عملي + نظري	الاختبارات والتقارير
10	4	المعرفة والتطبيق العملي	عرض النطاق الترددي للإرسال والطيف الترددي لتضمين (PM) و(FM) .	عملي + نظري	الاختبارات والتقارير
11	4	المعرفة والتطبيق العملي	طرق تضمين (FM) وتوليدها –الطريقة المباشرة , الطريقة الغير مباشرة التضمين الترددي المضخم Stero -(Secttreo FM)	عملي + نظري	الاختبارات والتقارير
12	4	المعرفة والتطبيق العملي	الكشف لإشارة (FM) –الكاشف النسبي –طريقة فوسترسلي.	عملي + نظري	الاختبارات والتقارير

13	4	المعرفة والتطبيق العملي	الترميز-نظرية العينات (Quantization) – ترميز التحويل .	عملي + نظري	الاختبارات والتقارير
14	4	المعرفة والتطبيق العملي	تضمين (PM) –مميزات التضمين النبضي – الأنواع (PCM)-(PPM)-(PDM)-(PAM).	عملي + نظري	الاختبارات والتقارير
15	4	المعرفة والتطبيق العملي	التوزيع (Multiplexing) –(FDM)– (TDM).	عملي + نظري	الاختبارات والتقارير

المحتوى العلمي

خارطة القياس المعتمدة

المحتوى التعليمي	عناوين الفصول	الأهمية النسبية	الأهداف السلوكية					عدد الفقرات
			المعرفة	الفهم	التطبيق	التحليل	التقييم	
الفصل الاول / المستوى الثاني	الاتصالات التناظرية وانوع دوائرها ونرددداتها وخواصها	%100	%35	%25	%10	%10	%20	5

اولا / مخطط انسيابي للتدرب بواسطة الوحدة النمطية

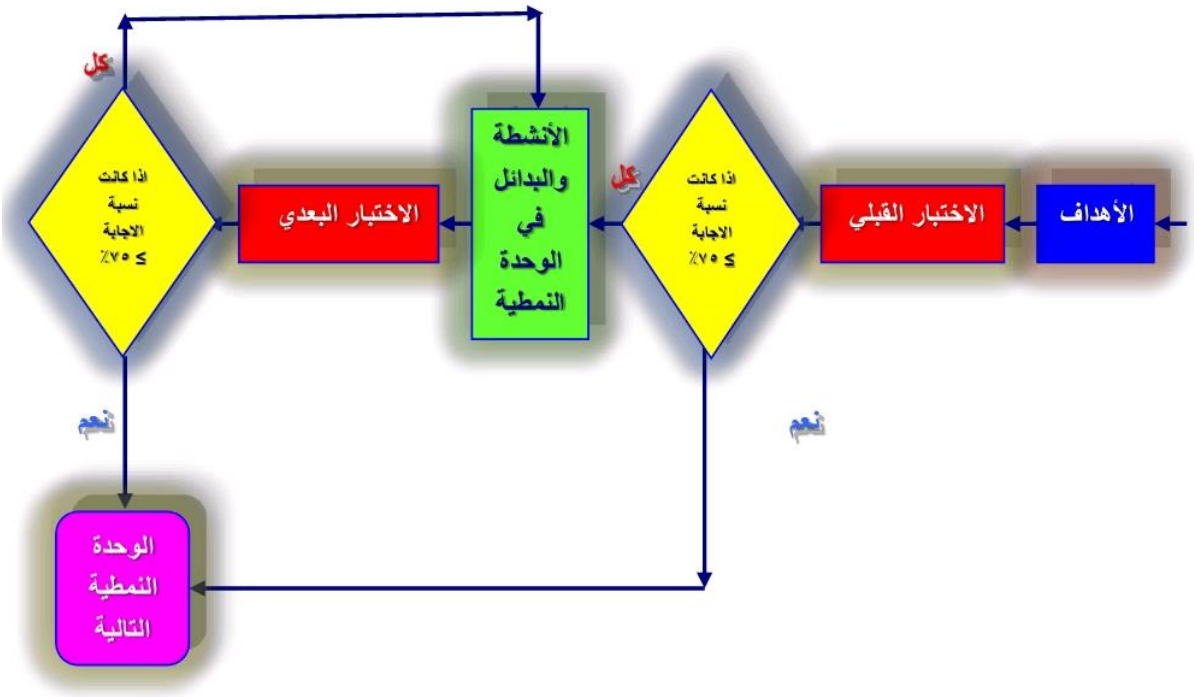

ثانياً / الامتحان القبلي

P2.1) What are the type and the cut-off frequency of each of the following filters?

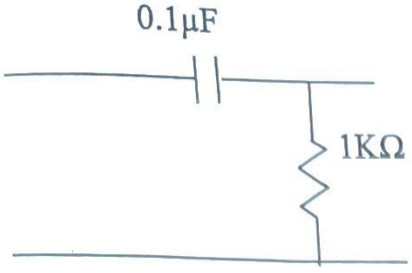

a)

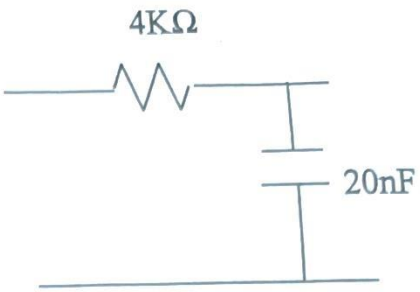

b)

P2.5) Design an R-C Active High Pass Filter to have cut-off frequency of 800HZ and gain of (-20). Sketch the circuit and the variation of $A_c(jf)$ versus frequency.

Solution:

Let us choose $C=0.02\mu F$.

ثالثاً / عرض الوحدة النمطية

المقدمة

الاتصالات التناظرية وهي التي تكون فيها قيم الإشارة المُرسلة أو المستقبلة على شكل تموجات متناظرة (منحنى على سبيل المثال) ومن أمثلتها الراديو، التلفزيون التماثلي. وكانت تكنولوجيا الاتصالات والبث أول ما بدأت تستعمل طريقة إرسال واستقبال الإشارات التناظرية. وهي قليلة الجودة فهي تتعرض للشوشرة بسهولة لذلك ابتكرت تكنولوجيا الإشارات الرقمية التي تفوقها بكثير.تستخدم الإشارة التماثلية بعض خصائص الوسط الناقل لتحمل معلومات الإشارة، فمثلا، كهربائيا فإن هذه الخصائص تكون عادة الفولتية والتردد والتيار والشحنة .ويمكن استخدام الإشارة التماثلية لنقل أية نوع من المعلومات.الظواهر الفيزيائية كالصوت والإضاءة والحرارة والموقع والضغط ويتم أحداث هذه التغيرات باستعمال أي نوع من أنواع المحولات أو مولدات الإشارة ومثال عليها الميكروفون والسماعة. وللتوضيح فمثلا في عملية تسجيل صوت تماثلي فإن التغير في شدة ضغط الصوت الواقع على الميكروفون يخلق تغيرا في اتساع فولتية التيار المارّ فيه. ومن ثم فإن الارتفاع في درجة الصوت تجعل التغيرات في اتساع الفولتية تزداد مع الحفاظ على التواتر. ولتوليد الصوت التماثلي يتم تحميل الإشارة التماثلية عبر إشارة أخرى لكي تنقل ويتم تسجيلها عبر الوسط الفيزيائي. وتستخدم للتعديل طرق منها تعديل الإتساع (AM) وتعديل الذبذبات.(FM)

1.1 Electrical signals:

Electrical signal may have one of the forms shown in Fig. 1.2.

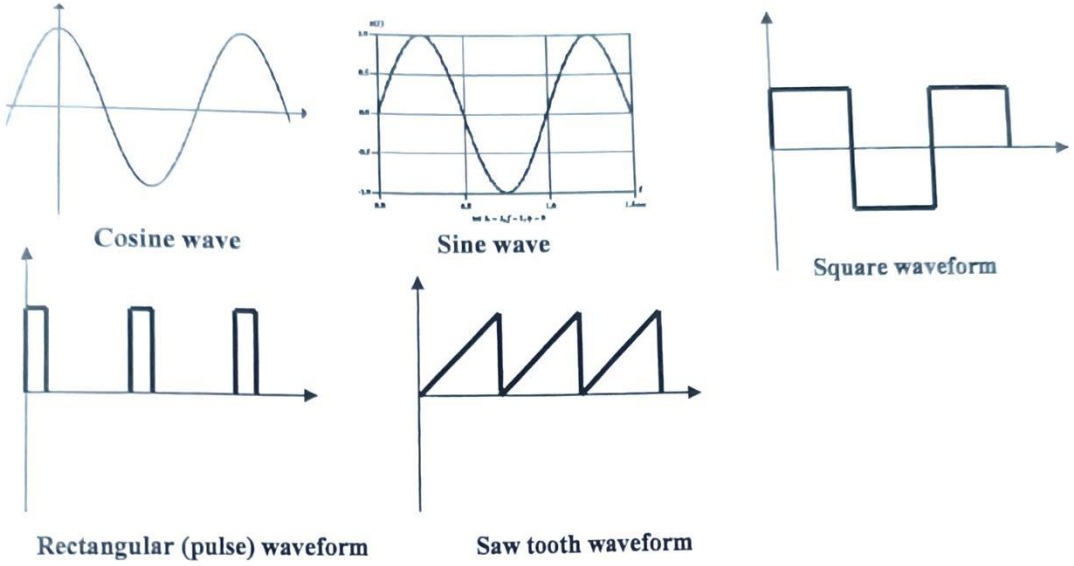

Fig. 1.2: Some forms of electrical signals.

The most familiar one is the cosine waveform. The cosine waveform is expressed as (see Figure 1.3):

$$V(t) = A\cos(\omega_o t + \phi) \quad \ldots\ldots\ldots\ldots\ldots\ldots (1.1)$$

Equation (1.1) is a mathematical representation for the cosine wave in time domain. The time domain means that the independent variable in this equation is the time "t". The parameters for this signal are:

1) The ***amplitude*** "A" in volts or amps.
2) The ***radian frequency*** ω_o in radians /sec. It is equal to $\omega_o = 2\pi f_o$. The frequency of a signal "f" is the number of complete cycles per one second. Its unit is "HZ ". Thus, $f_o = 1000HZ$ means that the complete cycle of this signal is repeated 1000 times in one second, therefore the time of one cycle or period T_o is (see Fig. 1.3):

$$T_o = \frac{1}{f_o} \quad \ldots\ldots\ldots\ldots\ldots\ldots (1.2)$$

3) The ***phase angle*** "ϕ" is measured in radian or degree. It is the phase angle of the signal at t = 0. When $\phi = 0$, the expression of (1.1) is reduced to

$$V(t) = A\cos(\omega_o t)$$

And when $\phi = -\pi/2$, the signal will be the sine wave, i.e.:

$$V(t) = A\sin(\omega_o t)$$

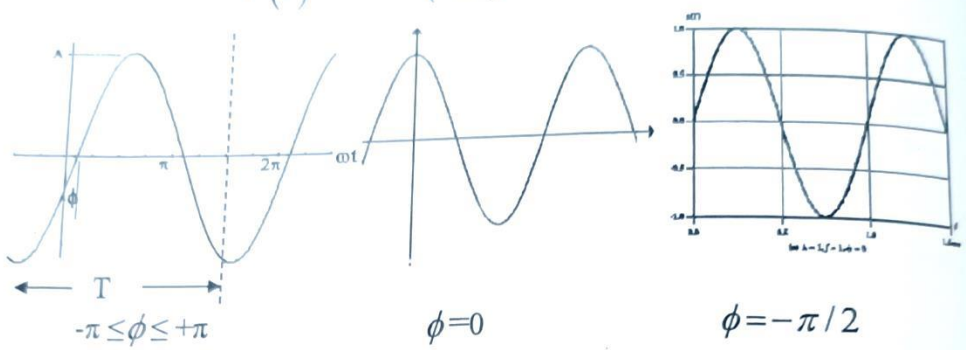

Fig: 1.3: Time- domain representation for $V(t) = A\cos(\omega_o t + \phi)$

The Figure below shows the phase spectrum of the signal in (1.1)

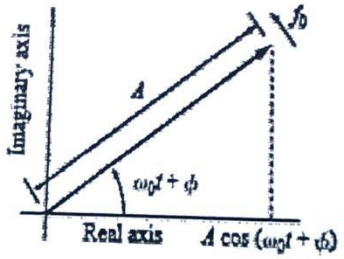

1.2 Frequency (Line) spectrums

To describe the signal in frequency domain, we must associate the corresponding amplitude "A" and phase angle "ϕ" with the corresponding frequency "f". Hence, the frequency domain of a composite signal can be represented by the ***Frequency spectrum*** shown in Fig. 1.4. This spectrum consists of two plots: ***amplitude*** versus ***frequency*** and **phase** versus ***frequency***. Thus, to represent the signal $V(t) = A\cos(\omega_o t + \phi)$ by a frequency (line) spectrum, a single line with length of "A" is drawn at $f = f_o$ in the amplitude plot and a single line with length of ϕ at $f = f_o$ in the phase plot (some reference books plot the line spectrum and phase spectrum versus radian frequency ω rather than the frequency itself)

1.3 Signal power:

The power of an alternating signal is:

$$P = \frac{V_{r.m.s}^2}{R} \quad (watt) \quad \ldots\ldots\ldots\ldots\ldots\ldots\ldots\ldots\ldots\ldots (1.3)$$

Where, $V_{r.m.s}$ is the root mean square of the instantaneous voltage signal and R is the load in ohm. For the cosine voltage, $V_{r.m.s}$ is equal to $A/\sqrt{2}$ then:

$$V_{r.m.s}^2 = \frac{A^2}{2}$$

If R = 1Ω, then :

$$\therefore P = \frac{A^2}{2} \quad \ldots\ldots\ldots\ldots\ldots\ldots\ldots\ldots\ldots\ldots (1.4)$$

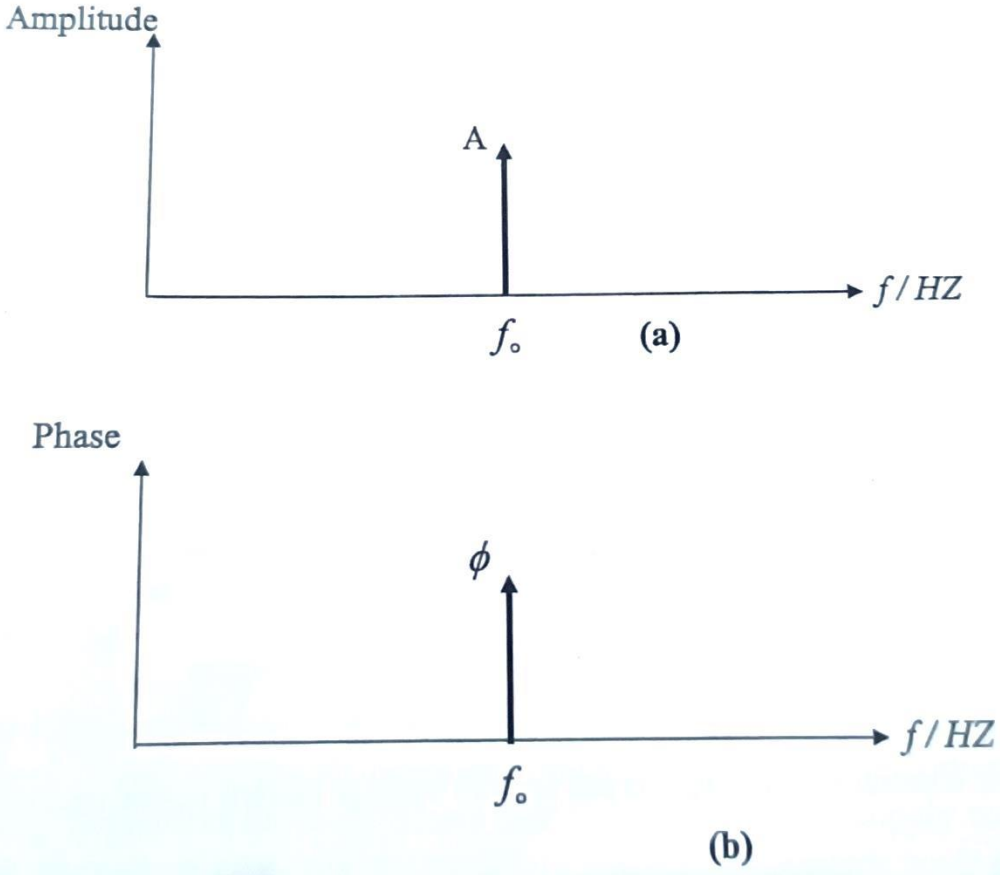

Fig. 1.4: line spectrum plots for $V(t) = A\cos(\omega_o t + \phi)$
(a) Amplitude plot. (b) Phase plot.

As an example, let us sketch the frequency spectrum for the voltage:

$$V(t) = 7 + 10cos(400\pi t + 160°) + 5sin(800\pi t)$$

And then calculate total power of this composite signal.

Solution:

The signal can be rewritten as:

$$V(t) = 7cos(2\pi 0t + 0°) + 10cos(2\pi \times 200t + 160°) + 5cos(2\pi \times 200t - 90°)$$

Then the frequency spectrums will be

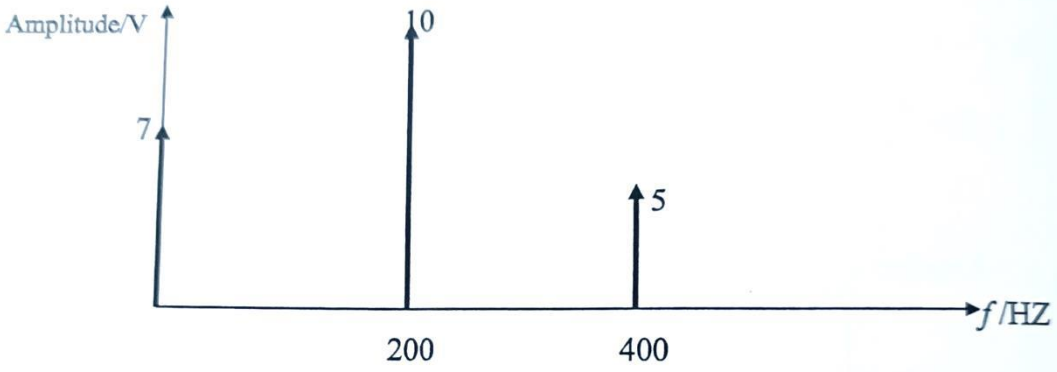

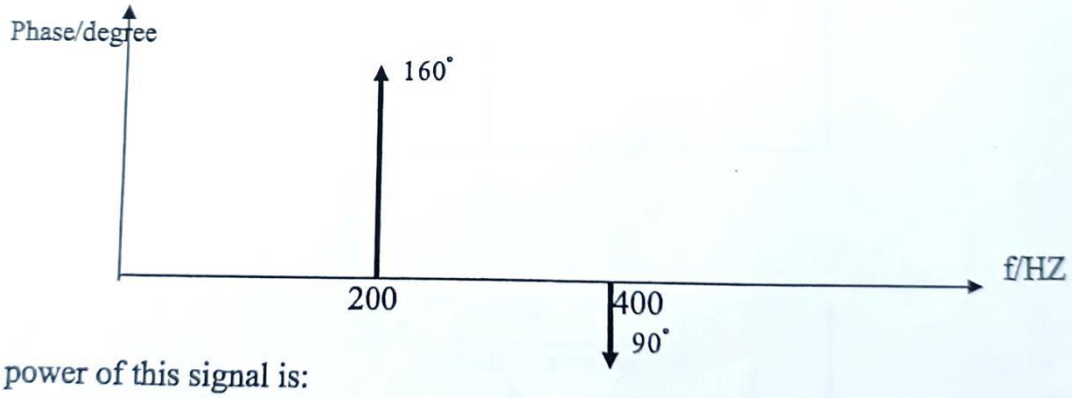

The power of this signal is:

$$P = 7^2 + \frac{10^2}{2} + \frac{5^2}{2} = 111.5 \text{ watts}$$

Problem: Sketch the line spectrum for the voltage shown below and calculate its power:

$$v(t) = 6 - 12\cos(4\pi 10^3 t - 60°) + 4\sin 8\pi 10^4 t$$

2. Electrical Filters:

An electrical filter is a network (usually four terminals) whose function is to pass alternating voltages in certain desired band of frequencies freely while suppressing or attenuating the neighboring undesired bands. The band of frequencies in which the signals are passed or transmitted freely is known as ***"Pass Band"*** and others in which signals are suppressed are known as ***"Stop Band"***.

Classification of Filters:

Filters networks are classified into the following four main classes:

a) Low Pass Filter (LPF):

These filters are designed to transmit signals of all frequencies from zero to certain critical or ***cut-off frequency*** "f_c" without attenuation (Figure 2.1.a). All frequencies higher than "f_c" are attenuated.

b) High Pass Filter (HPF):

These filters transmit signals of all frequencies lying between **infinity** and the ***cut-off frequency*** "f_c" without attenuation. All other frequencies below "f_c" are attenuated (Figure 2.1.b).

c) Band Pass Filter (BPF):

These filters are designed to transmit a specified band of frequencies lying between two ***cut-off frequencies*** "f_{c1}" and "f_{c2}". All other frequencies outside this band are attenuated (Figure 2.1.c).

d) Band Stop Filter (BSF):

These filters transmit all frequencies except those frequencies lying between two ***cut-off frequencies*** "f_{c1}" and "f_{c2}" (Figure 2.1.d).

Filters are found in two types:

*1) **Passive filters.***
*2) **Active filters.***

Passive filters are build up by using passive elements such as resisters, inductors, and capacitors. These passive elements are connected in a manner so that they perform a frequency-dependent network. These filters need no power supply to do filtering. In addition to passive elements, active filters use active elements such as ***transistors or operational amplifier (OP AMP).*** Active elements should be activated by power supplies to get functioning.

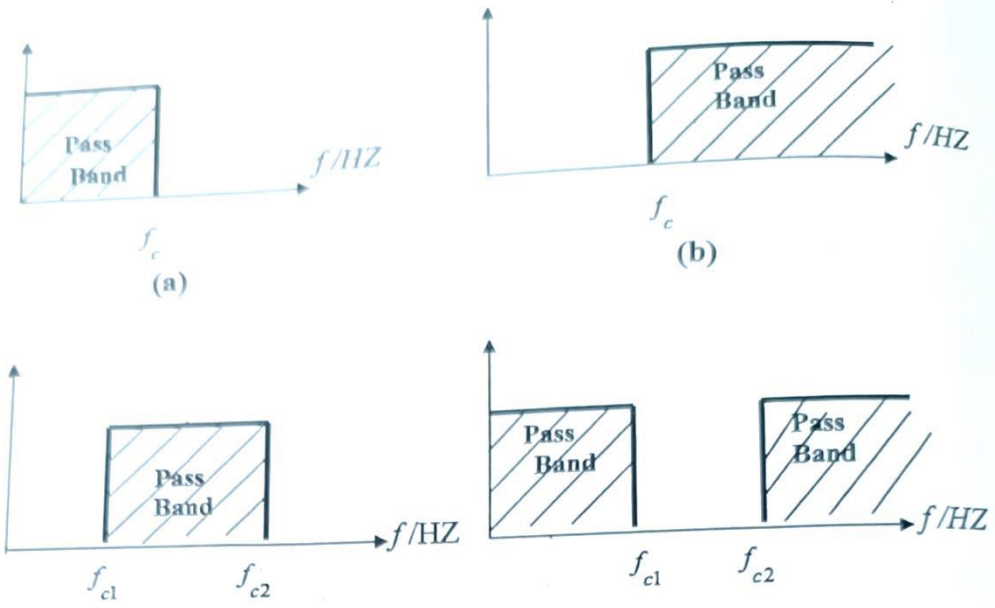

Fig 2.1: Classification of filters a) LBF b) HPF c) BPF d) BSF

2.1 R-C Passive Filters:

RC passive filters are build up using resistors and capacitors. They are very convenient from a circuit design viewpoint since they are cheap, compact and have a lower space-to-weight ratio than do inductors. Moreover, they have good and stable characteristics, accordingly, they lend themselves to integrated circuits techniques.

2.1.1 R-C Passive Low Pass Filter (LPF):

The network of ***R-C Low Pass Filter (LPF)*** together with its characteristic is shown in Figure 2.2. The transfer function can be written as:

$$v_o = i \times Z_c = i \times (-jX_c) = i \times \frac{1}{j2\pi f C}$$

$$v_{in} = i \times Z_t = i \times \left(R + \frac{1}{j2\pi f C} \right)$$

$$\therefore \frac{V_o}{V_{in}} = \frac{1}{1 + j2\pi f CR} = \left| \frac{V_o}{V_{in}} \right| e^{j\phi}$$

with

$$\left|\frac{v_o}{v_{in}}\right| = \frac{1}{\sqrt{1+(2\pi f\, CR)^2}} = \frac{1}{\sqrt{1+\left(\frac{f}{f_c}\right)^2}} \quad \ldots\ldots\ldots\ldots\ldots\ldots\ldots\ldots\ldots\ldots (2.1)$$

Where $f_c = \frac{1}{2\pi RC}$ $\ldots\ldots\ldots\ldots\ldots\ldots (2.2)$

is the ***cut-off frequency*** at which:

$v_o = \frac{v_{in}}{\sqrt{2}} = 0.707 v_{in}$ (i.e. when $2\pi f_c RC = 1$).

The ratio $\frac{V_o}{V_{in}}$ called the ***"Transfer Function"*** of the system. At low frequencies the term (f/f_c) approaches to zero, therefore $v_o \cong v_{in}$ (i.e. $(V_o/V_{in}) = 1$). When $f >> f_c$, the denominator in (2.1) will be very large and $v_o \cong 0$. Accordingly, this network acts as ***Low Pass Filter***. The output voltage has a phase shift ϕ characteristic as:

$$\phi = -\tan^{-1}(f/f_c) \quad \ldots\ldots\ldots\ldots\ldots\ldots\ldots\ldots\ldots\ldots\ldots\ldots (2.3)$$

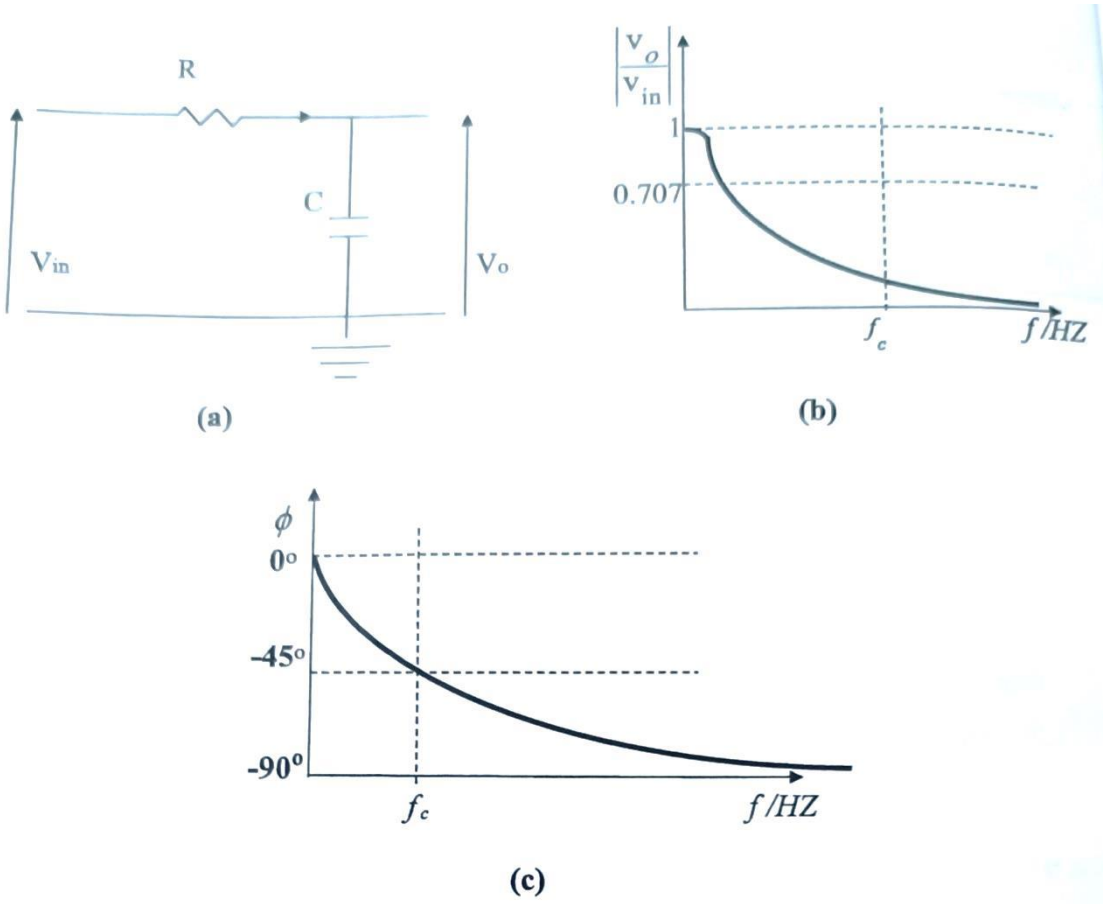

Fig 2.2: R-C Passive Low Pass Filter. a) Circuit diagram b) Amplitude Characteristic. c)Phase characteristic

2.1.2 R-C Passive High Pass Filter (HPF):

When the elements in the network of Figure 2.2 are interchanged, the resulting network is ***R-C High Pass Filter (HPF)*** which is depicted together with its characteristic in Figure 2.3. As before, the ***Transfer Function*** of this filter can be written as:

$$\frac{V_o}{V_{in}} = \frac{R}{R+\frac{1}{j2\pi f C}} = \frac{j2\pi f CR}{1+j2\pi f CR} = \left|\frac{V_o}{V_{in}}\right| e^{j\phi}$$

$$\left|\frac{v_o}{v_{in}}\right| = \frac{2\pi f\,CR}{\sqrt{1+(2\pi f\,CR)^2}} = \frac{1}{\sqrt{1+\left(\frac{f_c}{f}\right)^2}} \quad \ldots\ldots(2.4)$$

At $f = f_c \Rightarrow v_o = 0.707 v_{in}$ or

$$1+\frac{1}{2\pi f_c RC} = 2$$

or $$f_c = \frac{1}{2\pi RC} \quad \ldots\ldots(2.5)$$

This means that the expression for the cut-off frequency of the ***R-C High Pass Filter*** is the same as for the cut-off frequency expression of ***R-C Low Pass Filter***. The phase shift is:

$$\phi = 90^\circ - \tan^{-1}(f/f_c) \quad \ldots\ldots(2.6)$$

As a homework, the student must explain how this filter acts as a high pass filter

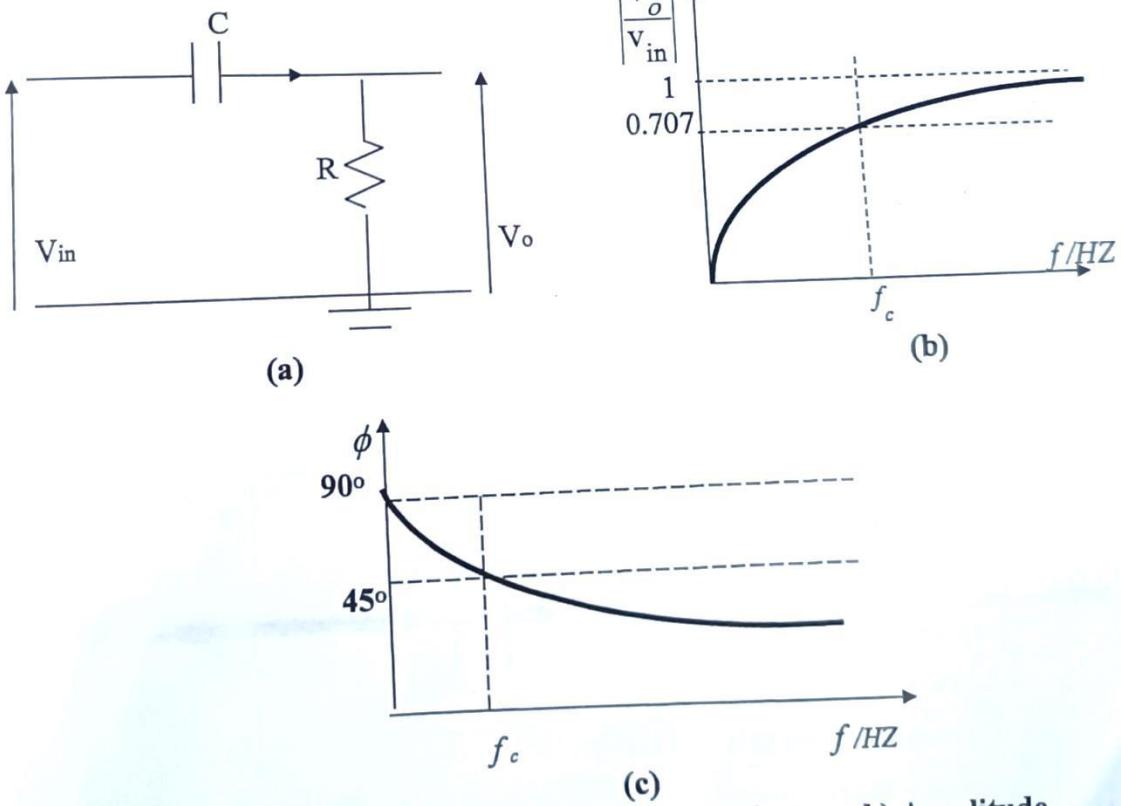

Fig. 2.3: R-C Passive High Pass Filter. a) Circuit diagram b) Amplitude characteristic. c) Phase characteristic

2.1.3 R-C Passive Band Pass Filter (BPF):

This filter is used to pass a certain band of frequencies (the frequencies between f_{c1} and f_{c2}) and to attenuate the frequencies outside this band. To get this facility, we can combine ***Passive RC Low Pass Filter*** and ***Passive RC High Pass Filter*** together in one network. Figure 2.4 shows a block diagram for a ***Band Pass Passive Filter*** in which ***LPF*** and ***HPF*** have been connected in cascade.

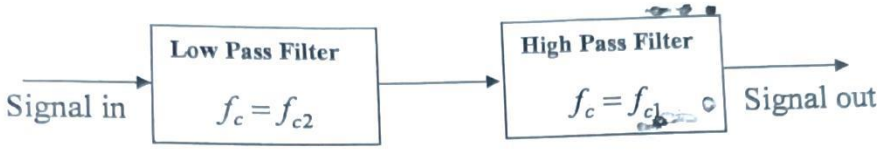

Figure 2.4: Block diagram of Passive Band Pass Filter

Note that the cut off frequency of the first stage (LPF) is larger than the cut off frequency of the second stage (HPF). The circuit diagram and the characteristic of the filter are shown in Figure 2.5.

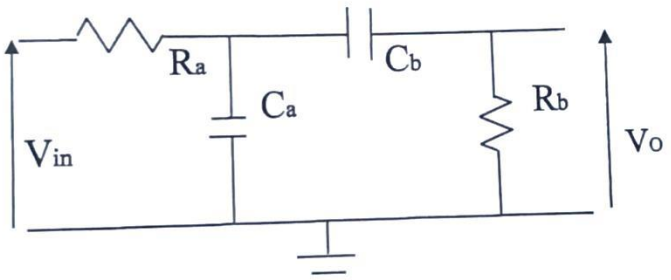

(a)

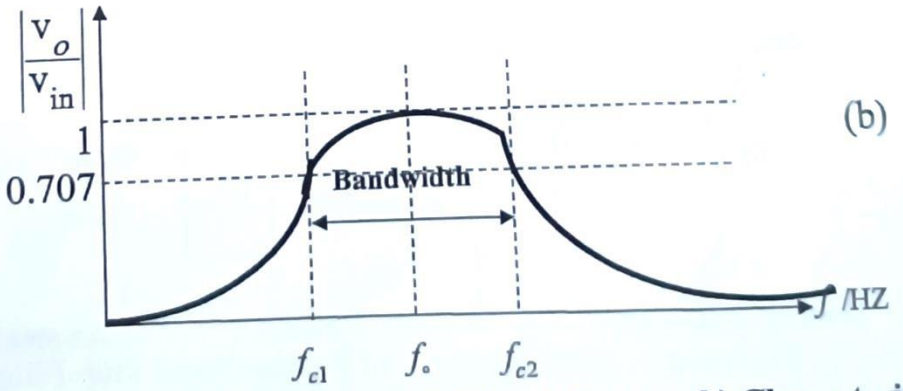

(b)

Fig. 2.5: R-C Passive Band Pass Filter. a) Circuit diagram b) Characteristic.

From Figure 2.5, we can conclude that:

$$f_{c1} = \frac{1}{2\pi R_1 C_1} \quad \text{.....(2.7)}$$

and

$$f_{c2} = \frac{1}{2\pi R_2 C_2} \quad \text{.....(2.8)}$$

With $f_{c2} > f_{c1}$. The band of the frequencies that are passed through this filter is called the *Band Width (BW)* of the filter, i.e.:

$$BW = f_{c2} - f_{c1} \quad \text{.....(2.9)}$$

And the center frequency is:

$$f_o = \sqrt{f_{c1} f_{c2}} \quad \text{.....(2.10)}$$

Notice:
The High Pass Filter stage in Figure 2.5a will act as a load in parallel with the capacitor C_a, therefore, practically, there will be shift in the designed values of the cut off frequencies. The solution for this problem is to insert an isolation circuit between the first and the second stage. This isolation circuit could be built up by using OP-AMP as it will be discussed in the section of ***Active Filters***.

2.1.3 R-C Passive Band Stop Filter (BSF):

This passive filter is designed so that it passes all frequencies above and below a particular band of frequencies that are lying between f_{c1} and f_{c2}. The block diagram for such a filter is shown in Figure 2.6 in which the two stages of ***LPF*** and ***HPF*** are connected in parallel.

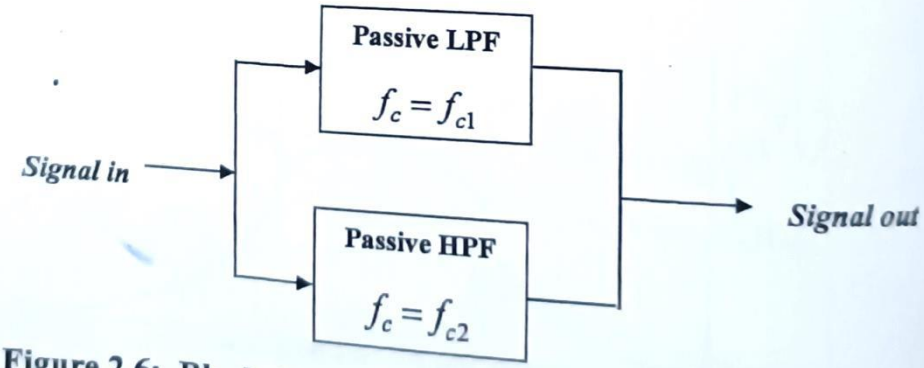

Figure 2.6: Block diagram of Passive Band Stop Filter (BSF)

In Figure 2.7, the circuit diagram of ***Passive RC BSF*** is shown together with its characteristic. This filter is also called ***T-Twin Notch filter*** because the pass band of this filter is very thin and looks like V shape.

4) For the Twin-T R-C Notch filter, write the expression for its center frequency f_o, then find the value of this frequency if: C=1000pF R=1KΩ

2.2 Active Filters:

There are areas of applications in communication systems where ***Active Circuits***, which employ OP-AMPS, have certain advantages over ***Passive Filters***. For instance, ***Active Circuits*** can perform filtering and amplification as well. We have noticed that the output voltage in the pass band of passive filters does not exceed the input voltage, i.e., ***Passive Filters*** are incapable of ***Amplification***. Using ***Active Filters*** a certain gain in addition to filtering can be achieved. The gain of ***Active Filters*** can be easily controlled. In addition, ***Active Filters*** provide circuit isolation. This advantage reduces the loading of a stage on the proceeding stage. The following are some of the advantages obtained when using these filters:

1) ***Reduction in size, weight, and cost.***
2) ***Easy to design.***
3) ***Increase circuit reliability.***
4) ***Can provide voltage or current gain.***
5) ***Improved performance.***
6) ***Can provide excellent isolation capability.***

2.4.1 The Operational Amplifier (OP-AMP):

The ***OP-AMP*** is ***Integrated Circuits***. Usually, it is manufactured with very high open-loop gain (A_o). Figure 2.8 shows the circuit symbol and top-view of the package of an eight-lead DIP OP-AMP (*μA741*). It has two main inputs, inverting input (pin no. 2) and labeled (-) and non-inverting input (pin no. 3) and labeled (+). The ***OP-AMP*** is powered from positive and negative D.C voltage power supplies via its terminals (pin no.7)&(pin no. 4) respectively. One or two terminals are available as the output. This OP-AMP is the 741 series.

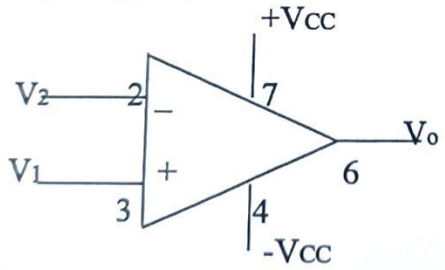

a)

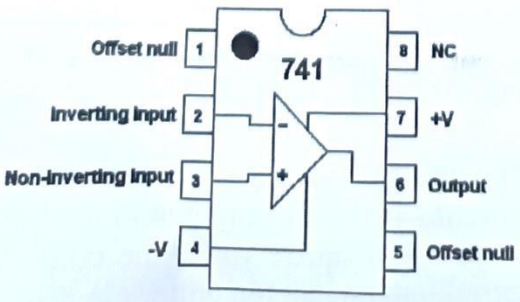

b)

Fig.2.8: The OP-AMP a) Circuit symbol b) Top-view.

$$V_o = -A_o(V_2 - V_1) \quad \ldots\ldots(2.11)$$

With $-V_{cc} \le V_o \le +V_{cc}$

$$V_2 - V_1 = \frac{-V_o}{A_o} \quad \ldots\ldots(2.12)$$

If the OP-AMP is designed to have a very large open loop gain, then:

$$V_2 - V_1 \to 0 \quad \text{as} \quad A_o \to \infty$$

$$i.e\ V_2 \cong V_1 \quad \ldots\ldots(2.13)$$

Thus, we can conclude from (2.13) that the current taken by the input impedance (Z_{in}) of the OP-AMP (Z_{in} exists between the two input terminals of the OP-AMP) is almost zero, i.e.,$Z_{in} = \infty$. This phenomenon is very useful when it is required to reduce the loading of a circuit on another circuit. Thus, using OP-AMP for instance reduces the loading case which the Band Pass Filter of Figure 2.5 suffers from.

As an application of the OP-AMP, consider the circuit shown in Figure 2.9(a).

Since $V_1 = 0$ earth connection

$\therefore V_2 \cong 0$ according to (2.13). Thus, terminal 2 is called **virtual ground**

Applying Kirchoff's current law at node #

$$\therefore \frac{V_{in}}{Z_i} = -\frac{V_o}{Z_f}$$

or

$$\frac{V_o}{Vin} = A_c = \frac{-Z_f}{Z_i} \ldots\ldots(2.14)$$

Where A_c is the closed-loop gain. If Z_f & Z_i are pure resistors, then:

$$A_{co} = \frac{-R_f}{R_i} \ldots\ldots(2.15)$$

Thus, equation (2.15) tells us that the closed-loop gain of the amplifier shown in Figure 2.9 (b) is a ratio of pure resistances and can be controlled by changing either one of these resistors within a limit. Also, the negative sign means that the output voltage is out of phase of the input voltage, i.e., the output is 180 out of phase of the input.

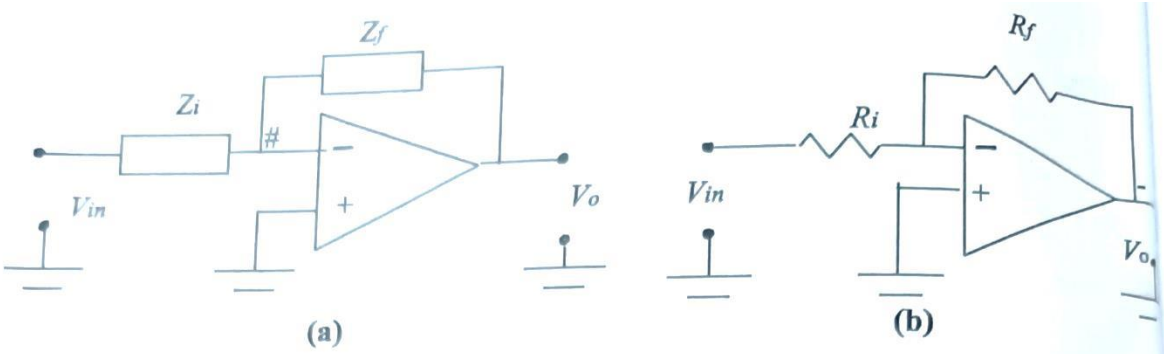

Fig 2.9: An amplifier using OP-AMP

2.4.2 R-C Active Low Pass Filter :

If the resistance R_f in Figure 2.9(b) is shunted by a capacitance, the resulting circuit acts as ***Active Low Pass Filter***, see Figure 2.10. At low frequencies less than the ***cut-off frequency*** of this filter, the capacitor will act as an open circuit because of its high reactance at these frequencies, therefore the circuit will pass these signal to its output with a gain of $-R_f/R_i$. As the frequency of the input signals increases and becomes larger than the ***cut-off frequency*** of this filter, the capacitor starts to short circuit R_f , i.e. V_o=0. Accordingly, this filter acts as ***Low Pass Filter***. The equation of the ***cut-off frequency*** is deduced from the transfer characteristic function as follows:

$$Z_f = \frac{R_f Z_c}{R_f + Z_c} = \frac{\frac{R_f}{j2\pi f C}}{R_f + \frac{1}{j2\pi f C}} = \frac{R_f}{1 + j2\pi f C R_f}$$

$$Z_i = R_i$$

The closed loop gain A_c

$$\therefore A_c = |A_c|\angle\theta^\circ = \frac{v_o}{v_{in}} = \frac{-Z_f}{Z_i} = \frac{-R_f}{R_i} \times \frac{1}{1 + j2\pi f C R_f}$$

$$\therefore |A_c| = \frac{A_{co}}{\sqrt{1 + (2\pi f C R_f)^2}} = \frac{A_{co}}{\sqrt{1 + \left(\frac{f}{f_c}\right)^2}} \quad \ldots\ldots\ldots\ldots (2.16)$$

Where(A_c) is defined in(2.15)

At $f = f_c$, $|A_c| = \frac{A_C}{\sqrt{2}} = 0.707A_c$

$\therefore 2\pi C f_c R_f = 1$

or

$$f_c = \frac{1}{2\pi C R_f} \quad \ldots\ldots\ldots\ldots\ldots\ldots\ldots\ldots\ldots\ldots\ldots\ldots (2.17)$$

and

$$\phi = -\tan^{-1}(f/f_c) \quad \ldots\ldots\ldots\ldots\ldots\ldots\ldots\ldots\ldots\ldots\ldots\ldots (2.18)$$

A variable (C) can be used to change the cut-off frequency of this filter, while for changing the gain (A_c), a variable R_i can be used.

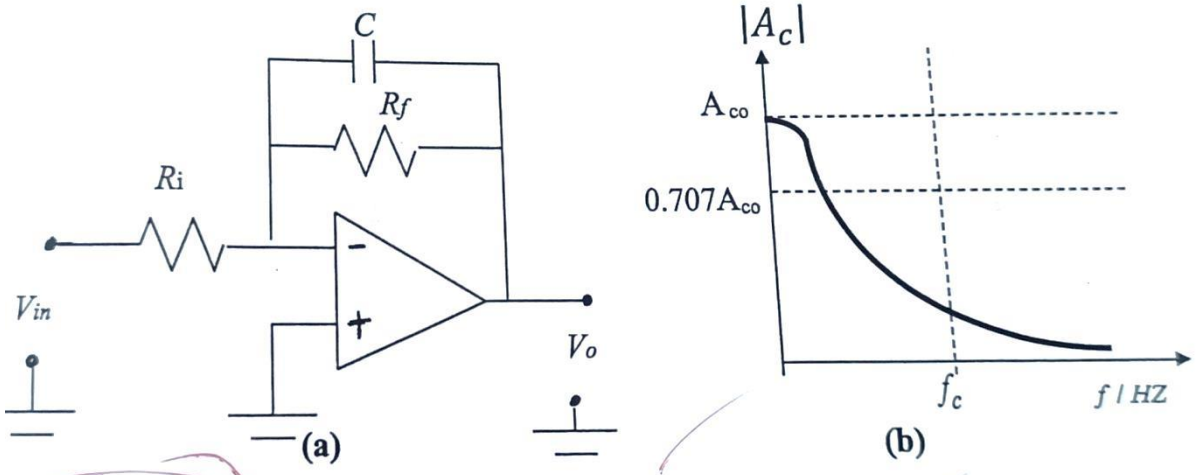

Fig.2.10: R-C Active Low Pass Filter a) The circuit b) The characteristic

2.4.3 R-C Active High Pass Filter:

Fig. 2.11 shows ***R-C Active High Pass Filter***. When the frequency of the input signal is less than the ***cut-off frequency*** of this filter, the capacitor acts as an open circuit, therefore these signals will not be transmitted to the output of this filter, i.e. V_o=0. Once the frequency of the input signal becomes more than the ***cut-off frequency,*** the capacitor starts to pass these signals. These signals are then amplified by the OP-AMP with a gain of $-R_f/R_i$. Now

$$Z_f = R_f$$

$$Z_i = R_i + \frac{1}{j2\pi C f}$$

$$A_c = \frac{-R_f}{R_i + \frac{1}{j2\pi C f}} = \frac{-R_f}{R_i} \times \frac{1}{1 + \frac{1}{j2\pi C f R_i}}$$

$$\therefore \quad |A_c| = \left|\frac{v_o}{v_{in}}\right| = \frac{A_{co}}{\sqrt{1 + \left(\frac{1}{2\pi C f R_i}\right)^2}} = \frac{A_{co}}{\sqrt{1 + \left(\frac{f_c}{f}\right)^2}} \quad \ldots\ldots\ldots (2.19)$$

At $f = f_c \Rightarrow |A_c| = \frac{A_{co}}{\sqrt{2}}$

$$\therefore \frac{1}{2\pi f_c C R_i} = 1$$

$$\therefore f_c = \frac{1}{2\pi R_i C} \quad \ldots\ldots\ldots (2.20)$$

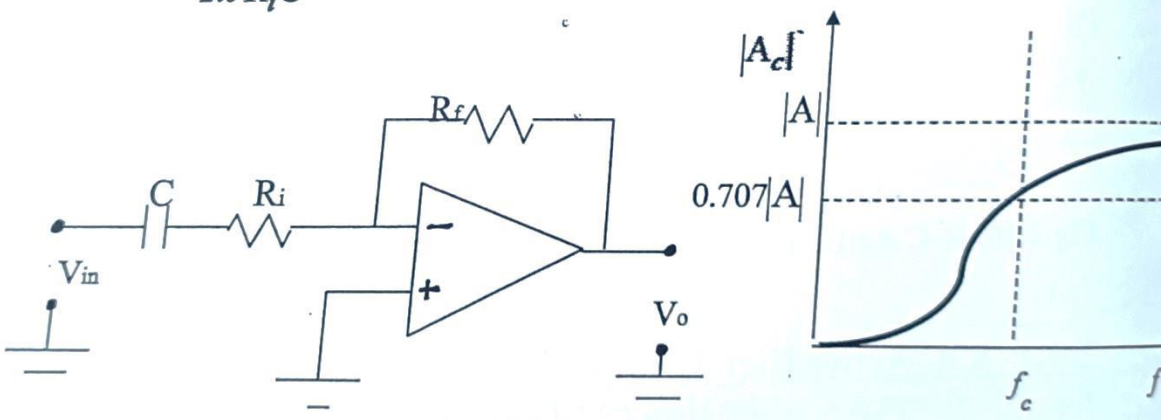

(a) (b)

Fig. 2.11: R-C Active High Pass Filter. a) Circuit. b) Magnitude characteristic.

2.4.4 R-C Active Band Pass and Active Band Stop Filters:

R-C Active Band Pass Filter circuit can be constructed by cascading a unity gain ***R-C Active Low Pass Filter***, a unity gain ***R-C Active High Pass Filter***, and ***an inverting amplifier*** with a gain $-R_f / R_i$ as shown in Figure 2.12, provided that the ***cut-off frequency*** of the first stage ***(Active LPF)*** f_u is greater than the ***cut-off frequency*** of

2.4.4 R-C Active Band Pass and Active Band Stop Filters:

R-C Active Band Pass Filter circuit can be constructed by cascading a unity gain ***R-C Active Low Pass Filter***, a unity gain ***R-C Active High Pass Filter***, and ***an inverting amplifier*** with a gain $-R_f/R_i$ as shown in Figure 2.12, provided that the ***cut-off frequency*** of the first stage ***(Active LPF)*** f_u is greater than the ***cut-off frequency*** of the next stage ***(Active HPF)*** f_l. i.e.:

$\frac{1}{2\pi R_1 C_1} > \frac{1}{2\pi R_2 C_2}$ and the Bandwidth of this filtert is:

$$B.W = f_u - f_l = \frac{1}{2\pi R_1 C_1} - \frac{1}{2\pi R_2 C_2}$$

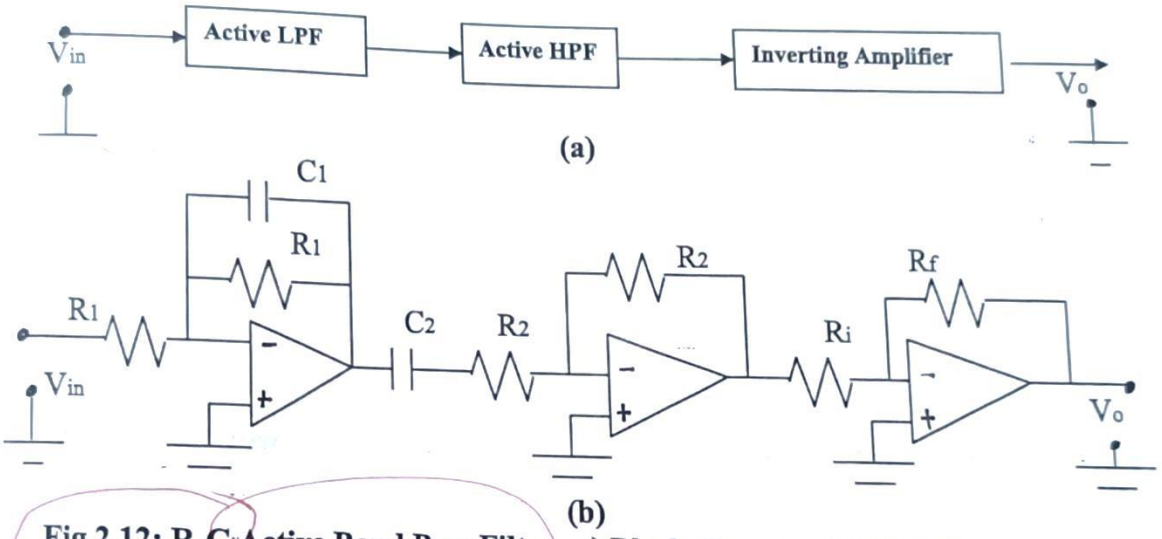

Fig.2.12: R-C Active Band Pass Filter. a) Block diagram. b) Circuit

The variation of magnitude of the transfer characteristic of this filter versus frequency is depicted in Fig.2.13

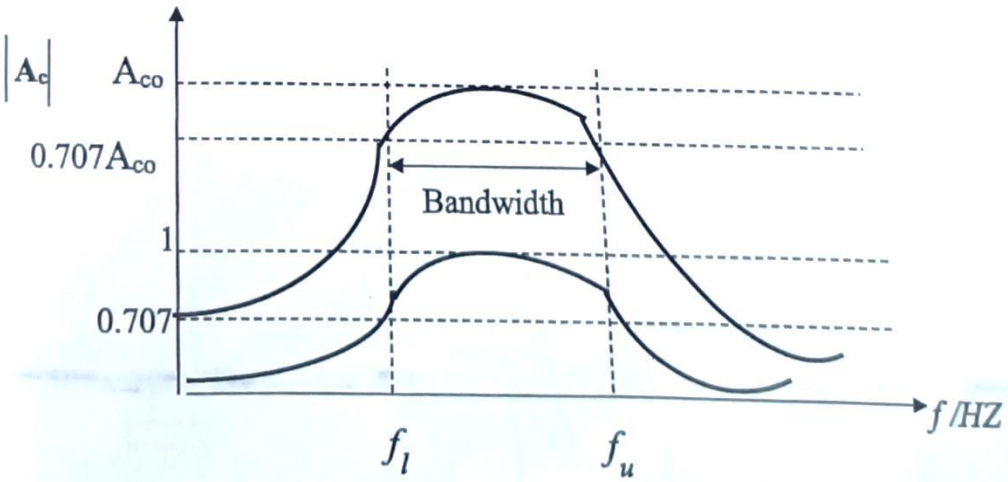

Fig.2.13: R-C Active Band Pass Filter Characteristic

To construct ***R-C Active Band Stop Filter***, a parallel combination of a unity gain ***R-C Active Low Pass Filter*** and a unity gain ***R-C Active High Pass Filter*** is used instead of cascading them and a summing amplifier is then used as shown in Figure 2.14. The C/Cs of such filter is shown in Fig.2.15. The cut-off frequencies are:

$$f_l = \frac{1}{2\pi R_1 C_1}$$

$$f_u = \frac{1}{2\pi R_2 C_2}$$

and the bandwidth

$$B.W = f_u - f_l$$

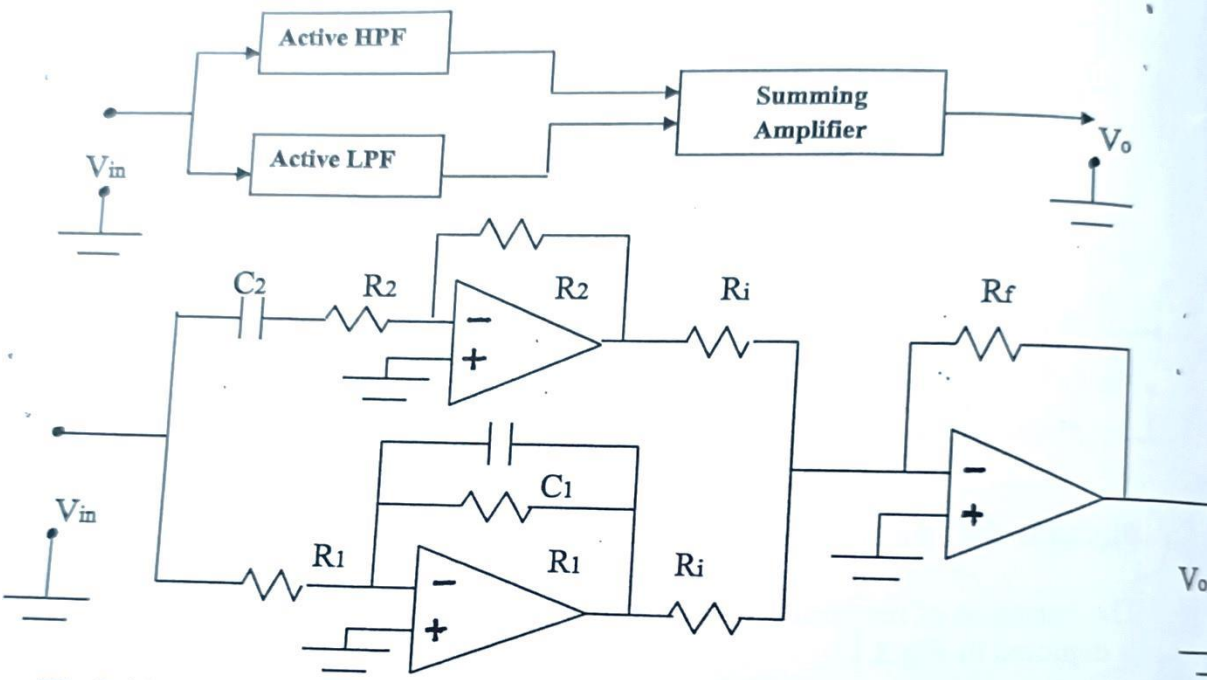

Fig.2.14: R-C Active Band Stop Filter (Band Reject Filter). a) Block diagram. b) Circuit

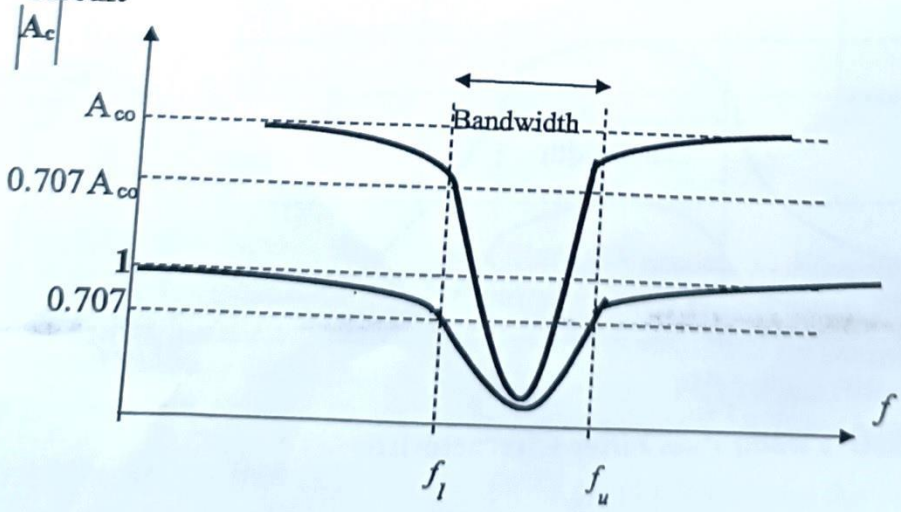

Figure 2.15: C/cs of Active BSF

To have accurate numerical plots of $|A_c|$ and phase versus (ω) of a filter, the ***"Bode plots"*** are used. They are two separate plots; one shows how ***the magnitude*** of $|A_c|$, in dB, varies with (ω). And the other plot shows how the ***phase angle*** of $|A_c|$, in degrees, varies with (ω). Both plots are plotted in semi log paper for greater accuracy in representing the wide range of frequency values. Fig.2.16 shows ***Bode plot*** of $|A_c|$ versus (ω) for ***R-C Active Low Pass Filter***. The plot designated ***"first-order"*** belongs to the filter shown in Fig.2.10a. This plot illustrates that the transition between pass band and stop band has a slop of ***20dB/decade***. This slop is not too sharp. To build a filter with more sharpness (i.e. close to the ideal filter), another identical filter should follow the first one. As a result, the transition slop will increase now to ***40dB/decade***. The resulting filter is called ***second-order R-C Active Low Pass Filter***. Thus, the more identical filters are cascaded the closer c/cs to the ideal filter is obtained. Fig.2.17 shows such a filter.

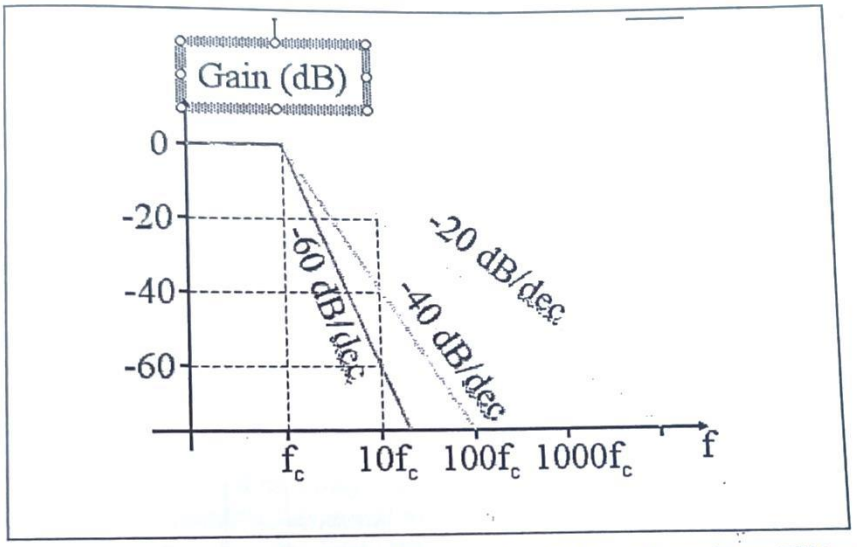

Fig. 2.16: Bode plot of the transfer C/Cs of Low Pass Filter.

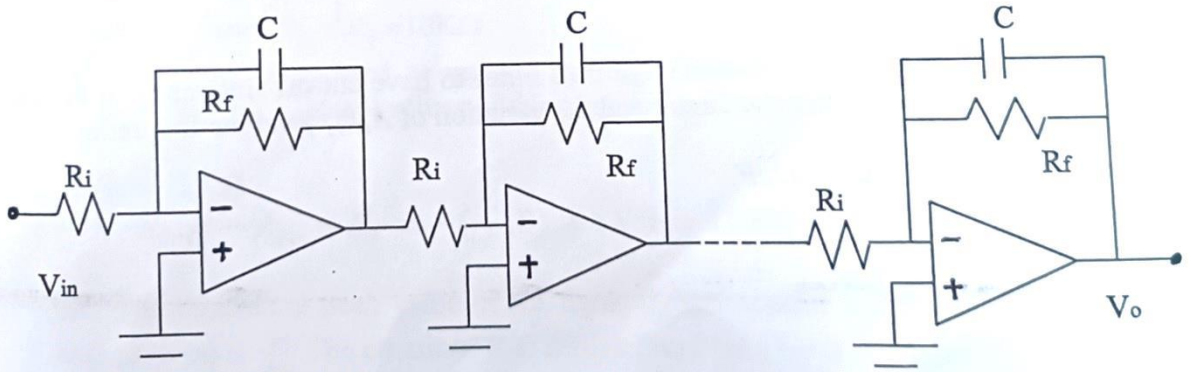

Fig.2.17: Identical Active Low Pass Filters connected in cascade.

Solved problems

P2.4) Design an R-C Active Low Pass Filter to have cut-off frequency of 3KHZ and passband gain of -10. Sketch the circuit and the variation of A_c versus frequency.

Solution:
Let us choose $C=0.01\mu F$.

$$f_c = \frac{1}{2\pi C R_f}$$

$$\therefore \quad R_f = \frac{1}{2\pi C f_c} = \frac{1}{2\times 3.14\times 0.01\times 10^{-6}\times 3\times 10^{3}} = 5305\Omega$$

$$\text{since } A_{\infty} = 10 = \frac{R_f}{R_i}$$

$$\therefore \quad R_i = \frac{5305}{10} \cong 530\Omega$$

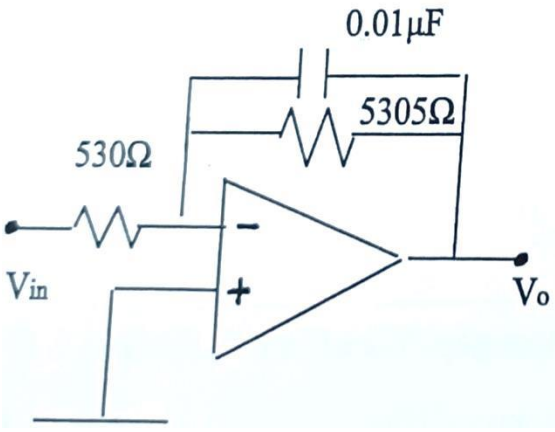

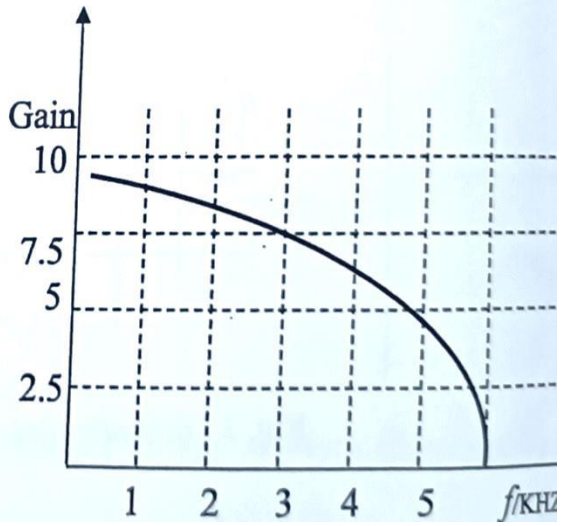

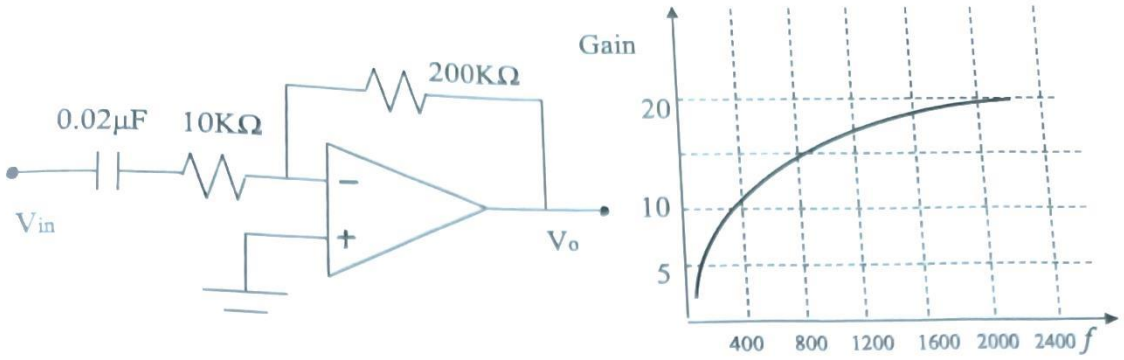

P2.6) Design an R-C Active Band Pass Filter to have $f_l = 0.8KHZ$ and $f_u = 3KHZ$ and a gain of (-10).

Solution:

We can make use of the design of the filters in problems (P 2.4) & (P 2.5), since their cut-off frequencies are equal to what we is required in this problem. However, their gain must be designed to be unity. Therefore, the first stage will be R-C Active Low Pass Filter with element values equal to:

$C_1 = 0.01\mu F$ and $R_f = R_i = 5305\Omega$

Element values for the second stage; R – C Active High Pass Filter will be:

$C_2 = 0.02\mu F$ and $R_f = R_i = 10K\Omega$

These stages are connected in cascade and then followed by an inverting amplifier with gain of (-10). Element values of this amplifier are designed as:

$$Let\ R_i = 1K\Omega$$
$$Then\ \ R_f = -A_{co} \times R_i = -(-10) \times 1K\Omega = 10K\Omega$$

Note: The maximum peak value of the input signals applied to the above designed filters must be $\leq \frac{V_{cc}}{A_c}$. The circuit of R-C Active Band Pass Filter will be:

3. Modulation:

Most input signals, as they come from the transducer, cannot be sent directly over the channel. Instead, a ***"Carrier Wave"***, whose properties are better suited to the transmission medium in question, is modified to represent the message. ***Modulation*** is the systematic alteration of a ***Carrier Wave*** in accordance with the message ***(Modulating Signal)*** so that an information-bearing modulated wave whose properties are best suited to the given communication task is produced.

It is possible to identify three basic types of ***Modulation***:

1) ***Continuous Wave (C.W) (Analogue) modulation***, for which the ***Carrier*** is simply a ***sinusoidal*** waveform, and
2) ***Pulse modulation***, for which the ***Carrier*** is a ***periodic train of pulses***.
3) ***Digital (Coding) Modulation.*** In this type, the carrier is a sinusoidal waveform, however, the information is in digital form.

But regardless of type; CW or pulse, analogue or digital, modulation is a ***"reversible process"*** so that the message can be recovered at the receiver by the complementary operation of ***"Demodulation"***.

Why Modulation?

The main purpose of ***Modulation*** is to match the signal to the ***Transmission medium***. However, there are additional several benefits and applications of ***Modulation.*** These advantages are listed below:

1) ***To match the transmitted signal to the transmission channel.***
2) ***For sufficient transmission and ease of radiation.***
3) ***To reduce noise and interference.***
4) ***For frequency assignment.***
5) ***For Multiplexing.***
6) ***To overcome equipment limitations.***

3.1 Analogue Modulation:

In this modulation, as pointed previously, one parameter of the ***continuous carrier wave*** (such as ***Amplitude, frequency***, or ***Phase***) is varied in proportion to the ***information (message) signal***. Thus, ***Amplitude Modulation (AM)*** is produced when the amplitude of the carrier is varied in accordance with the information signal.

3.1.1 Amplitude Modulation (AM):

As stated previously, the carrier in ***Amplitude Modulation*** is sinusoidal wave. Therefore, it is expressed as:

$$V_c = A\cos\omega_c t \quad \ldots\ldots\ldots\ldots\ldots\ldots\ldots\ldots\ldots\ldots (3.1)$$

Practically, the information signal is composite signal. However, and to have simple analysis, we assume the information signal consists of single sinusoidal waveform and expressed as:

$$V_m = B\cos\omega_m t \quad \ldots\ldots(3.2)$$

Where $\omega_c >> \omega_m$ The modulated carrier or the AM signal will be:

$$V_{AM} = (A + B\cos\omega_m t)\cos\omega_c t$$

or

$$V_{AM} = A\left(1 + \frac{B}{A}\cos\omega_m t\right)\cos\omega_c t$$

or

$$V_{AM} = A(1 + k\cos\omega_m t)\cos\omega_c t \quad \ldots\ldots(3.3)$$

Where "k" is the ***Modulation Index*** or ***Modulation Depth*** and it is equal to

$$k = \frac{\textit{Peak value of modulating signal}}{\textit{Peak value of unmodulated carrier signal}} = \frac{B}{A} \quad \ldots\ldots(3.4)$$

The percent modulation Index "K" is

$$K = \frac{B}{A} \times 100\% \quad \ldots\ldots(3.4a)$$

Figure 3.1 shows the unmodulated carrier and the carrier which is amplitude modulated by a single tone information signal. "K" varies between 0<K<100% without introducing distortion and the best value is 100% when A=B. This occurs when the maximum peak of ***AM*** signal is 2A. When K>100%, the ***AM*** signal will be distorted and have a ***phase reversal*** and **distortion** (see Figure 3.2).

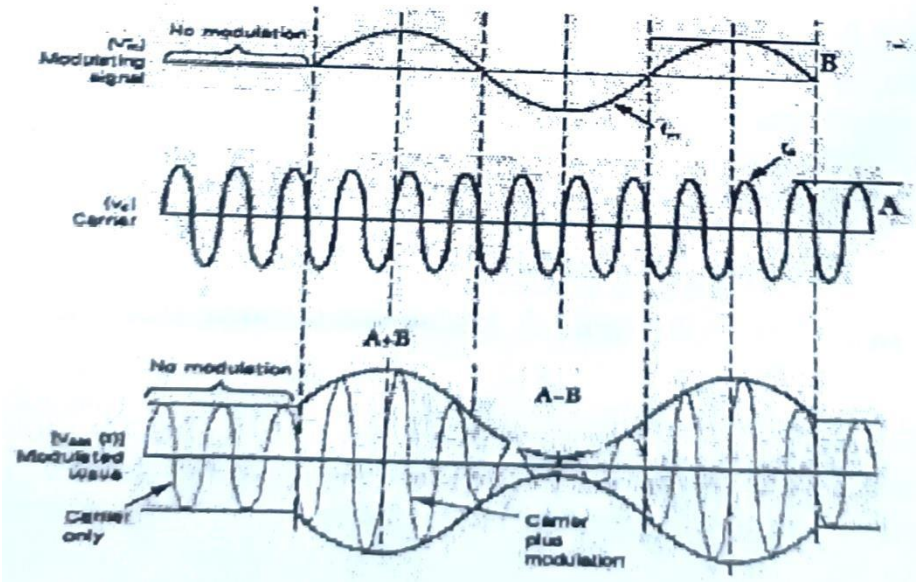

Figure 3.1: An AM signal

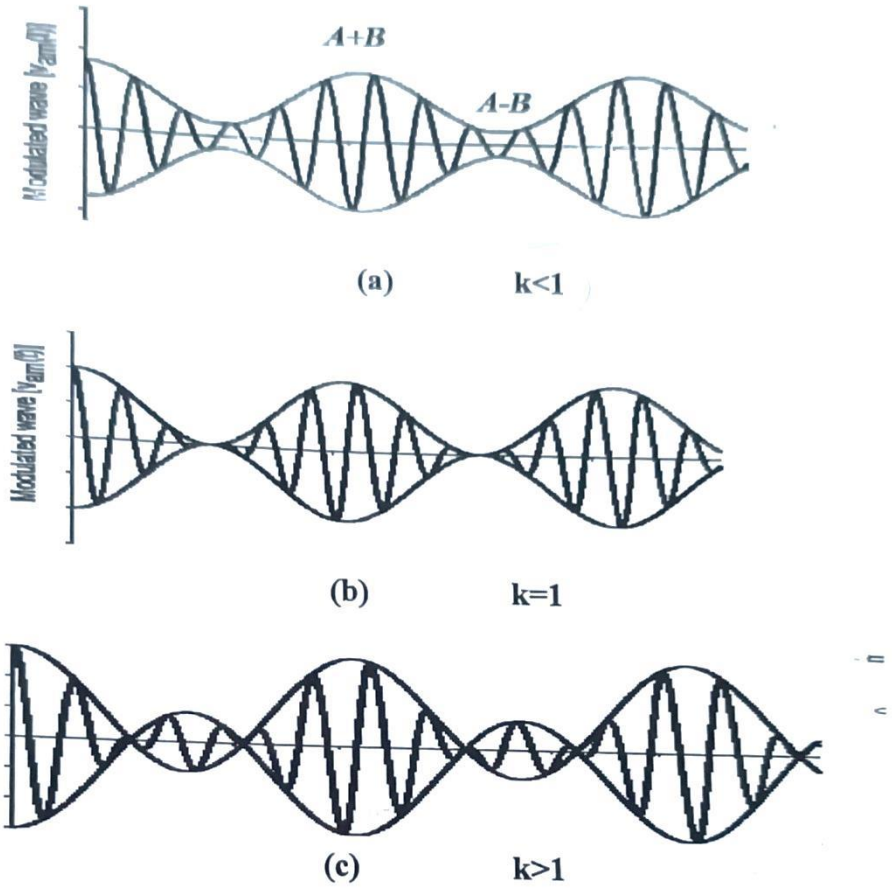

Fig.3.2: AM signal for different values of the modulation index "*k*".

From the AM signal shown in figure 3.1, the ***Modulation Index*** "k" can be determined from:

$$k=\frac{(A+B)-(A-B)}{(A+B)+(A-B)}=\frac{2B}{2A}=\frac{B}{A} \quad \text{as before.....(3.5)}$$

When a modulated signal is detected in a receiver, the output of the detector follows the envelope of the modulated carrier. The more depth of modulated carrier, therefore, the greater is the useful receiver output. Thus, a wave modulated as in Figure 3.2b would produce considerably more useful output than the one shown in Figure 3.2a, while the detected information is not the same as the transmitted one in case of the carrier being ***over modulated*** (Figure 3.2c).

Going back to the AM signal expression, and by making use of the trigonometric identity:

$$\cos(\theta)\cos(\beta)=\frac{1}{2}\cos(\theta-\beta)+\frac{1}{2}\cos(\theta+\beta)$$

Equation 3.3 can be rewritten as

$$V_{AM} = A\cos\omega_c t + \frac{kA}{2}\cos(\omega_c - \omega_m)t + \frac{kA}{2}\cos(\omega_c + \omega_m)t \quad \ldots\ldots\ldots\ldots\ldots\ldots (3.6)$$

Thus, AM signal consists of three components:

1) The un-modulated carrier
2) The Lower Side Frequency (LSF) with frequency of $(f_c - f_m)$ and peak of $\frac{kA}{2}$
3) The Upper Side Frequency (USF) with frequency of $(f_c + f_m)$ and peak of $\frac{kA}{2}$

From the above, we can conclude that the frequency spectrum of the information is transferred to new frequencies when it modulates the carrier, thus the modulation process is ***Frequency Transfer***. These new frequencies (the two side bands) are symmetrically placed relative to the carrier signal as shown in Figure 4.3.

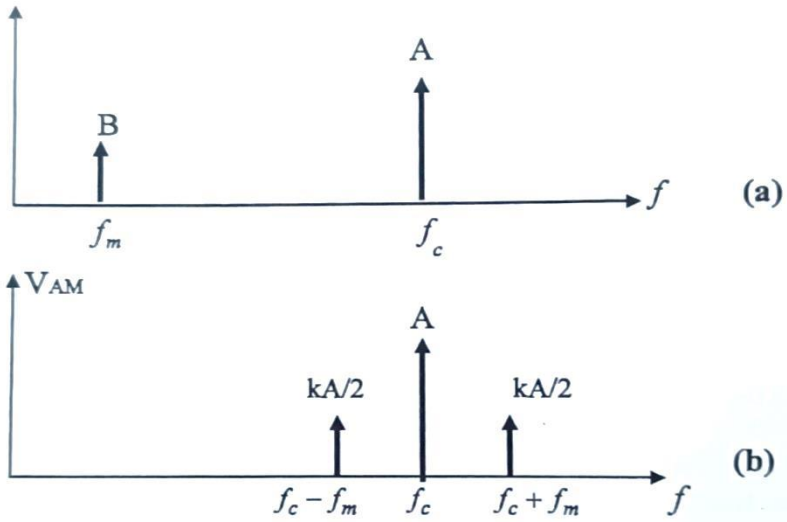

Fig 3.3: Amplitude frequency spectrum for: a) Unmodulated carrier and modulating signal (i.e., before modulation). b) AM signal.

From Figure 3.3b, the Bandwidth of AM signal is:

$$B.W = (f_c + f_m) - (f_c - f_m) = 2f_m \ HZ \quad \ldots\ldots\ldots\ldots\ldots\ldots (3.7)$$

Thus, the Bandwidth of AM signal is always twice the bandwidth of the message. is known that most information or messages, whether speech, music, or videos a complex waves and not as a signal with single frequency as we'd introduced earlie The complex waves are considered according to Fourier series, as an infinite sum sine and cosine waves with fundamental and harmonic frequencies. Thus, rather tha speaking about upper and lower side frequencies, the ***Lower Side Band (LSB)*** a ***Upper Side Band (USB)*** must be assigned for the bands that are symmetrically plac relative to the carrier signal, as illustrated in Figure 3.4. ***The bandwidth in this case twice of the maximum of the modulating signal (the message)***, i.e.:

$$B.W = 2\left(f_m\right)_{max}$$

and the overall modulation index (k_t):

$$k_t = \sqrt{k_1^2 + k_2^2 + k_3^2 + \ldots\ldots} \quad \ldots\ldots\ldots\ldots\ldots\ldots\ldots\ldots\ldots\ldots\ldots\ldots (3.8)$$

Provided that $k_t \leq 1$. k_1, k_2, k_3 , are the modulation indices of the individual sine and cosine waves of the complex modulating signal.

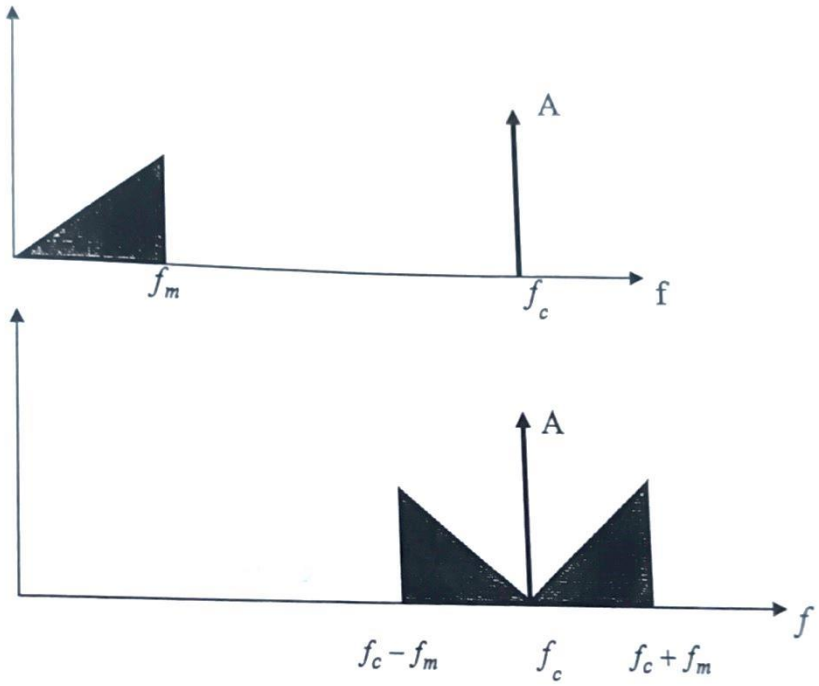

Fig.3.4: Amplitude- frequency spectrum for AM signal. The carrier signal is amplitude modulated by a complex waveform.

3.1.1.1: Power contents of AM signal:

The total power of ***AM signal*** that is produced by modulating a carrier signal by a single tone modulating signal is:

$$P_t = P_{carrier} + P_{USB} + P_{LSB}$$

$$= \frac{A^2}{2} + \frac{k^2A^2}{8} + \frac{k^2A^2}{8} = \frac{A^2}{2} + \frac{k^2A^2}{4}$$

$$\therefore P_t = \frac{A^2}{2}\left(1 + \frac{k^2}{2}\right) \quad \ldots\ldots\ldots\ldots\ldots\ldots\ldots\ldots\ldots\ldots\ldots\ldots (3.9)$$

When k=1 (i.e., 100% modulation), the total power of the side bands ($P_{USB} + P_{LSB}$) is equal to 50% of the carrier signal power. The ***power efficiency*** (η) is the ratio of the side bands power to the total power, i.e.:

$$\eta = \frac{P_{side\ bands}}{P_t} = \frac{\frac{k^2A^2}{4}}{\frac{A^2}{2}\left(1+\frac{k^2}{2}\right)} = \frac{k^2}{2+k^2} \quad \text{.....(3.10)}$$

3.1.1.2: Suppressed-Carrier, Double-Side Band, and... Single-Side Band Transmission:

Equation (3.10) states that, when k=1, only one-third (i.e., $P_t/3$) of the ***AM signal*** power is contained in the two side bands and the remaining two-third (i.e., $2P_t/3$) is contained in the carrier signal. If the carrier signal is suppressed, only the side bands power remains. As this is only ($k^2P_c/2$), a two-third saving is affected at 100% modulation and even more is saved as the depth of modulation is reduced. Upon suppressing the carrier signal, the AM signal is called ***Double-Side Band Suppressed Carrier (DSB-SC) (the conventional AM signal is called Double Side Band Large or Full Carrier DSB-LC or DSB-FC)***. The bandwidth of ***DSB-SC*** is still twice the modulating signal band.

If one of the side bands is also suppressed, the remaining power is ($k^2P_c/4$), a further saving of 50% over carrier-suppressed AM. This new signal is called ***Single Side Band-Suppressed Carrier (SSB-SC)***. An additional advantage of ***(SSB-SC)*** scheme is that only half as much bandwidth is required for the transmission, and therefore twice as many stations can be transmitted simultaneously.

The major disadvantage of ***(DSB) & (SSB)*** schemes is that they require more expensive receiver, since those receivers must be able to restore the eliminated carrier signal before demodulation. Figure 3.5 shows the amplitude-frequency spectrum for ***(DSB-SC)*** and ***(SSB-SC)*** schemes.

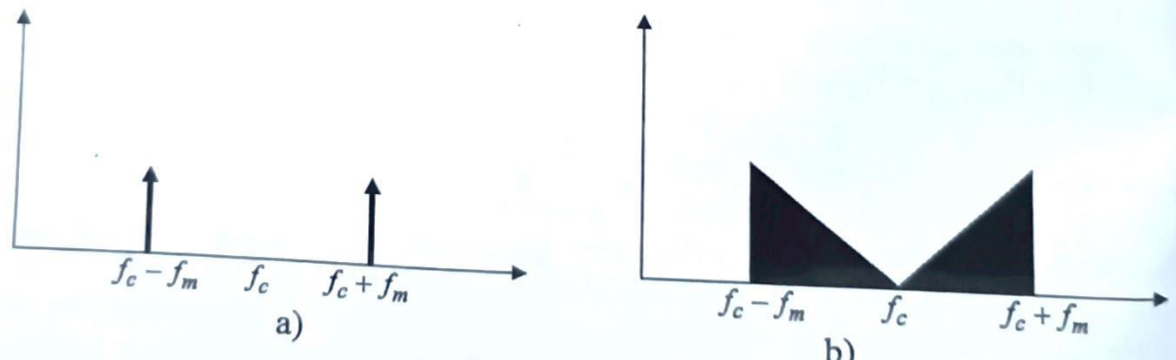

DSB-SC

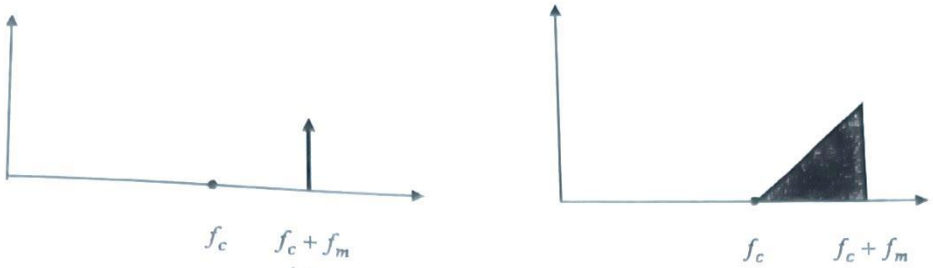

SSB-SC

Fig 3.5: Amplitude- frequency spectrum for DSB-SC & SSB-SC.

From figure 3.5, it is clear that:

$(B.W)_{DSB\text{-}SC} = 2f_m$ (For single tone modulating signal)

$(B.W)_{DSB\text{-}SC} = 2(f_m)_{max}$ (For composite modulating signal)

$(B.W)_{SSB\text{-}SC} = f_m$ (For single tone modulating signal)

$(B.W)_{SSB\text{-}SC} = (f_m)_{max}$ (For composite modulating signal)

Solved problems

P3.1) An amplitude modulated signal is expressed as:

$$V_{AM} = 5(1+0.5\cos 3140t)\cos 2\pi 10^5 t \quad \text{volts}$$

Find:

a) The modulation depth.
b) The modulating frequency.
c) The carrier frequency.
d) The peak value of the signal.
e) If the signal is to be transmitted, what will be its power?

Solution:

Comparing the given expression with standard AM equation which is rewritten here:

$$V_{AM} = A(1+k\cos\omega_m t)\cos\omega_c t \quad \text{then:}$$

a) k=0.5 or K=50%

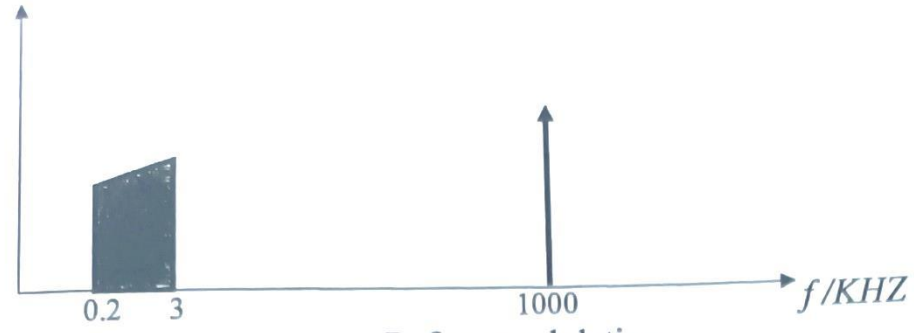

Before modulation

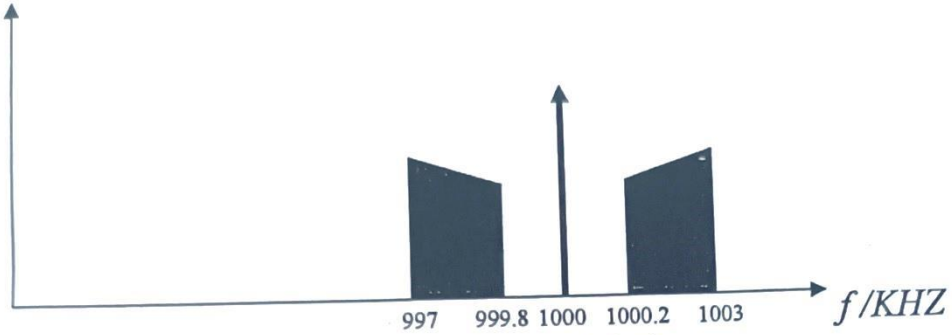

After modulation

P3.3) AM wave have the following information:

50v at 750 KHZ
20v at 748 KHZ
20v at 752 KHZ

a) What is the carrier frequency?
b) What are the frequencies of USB and LSB?
c) What is the frequency of the modulating signal?
d) Calculate the modulation index.

Solution:

a) The carrier frequency is 750 KHZ.
b) USB frequency is 752 KHZ, while LSB frequency is 748 KHZ.
c) The modulating frequency (f_m) is determined from:

$$f_m = f_c - (f_c - f_m) = 750 - 748 = 2\,\text{KHZ}$$

or

$$f_m = (f_c + f_m) - f_c = 752 - 750 = 2\,\text{KHZ}$$ as before

3.1.1.3: AM Modulators and Transmitters:

Equation (3.6) depicts that the modulation process produces new frequencies, thus the modulation is a ***frequency translation***. The device that generates an AM wave; a modulator, must therefore be either ***time-varying*** or ***nonlinear*** in order that it can produce new frequencies components. The unwanted frequencies components then can be filtered.

DSB-FC (AM) Modulators:

a) Square Low Modulators: In this modulator, the carrier signal and the modulating signal are together applied at the input of a ***square-law*** device, such as a ***diode*** which is biased into the nonlinear region of its i-v characteristic (see Figure3.6),

the current flowing in the diode will be

$i = a_1 V_{in} + a_2 V_{in}^2$ ..... (a_1, a_2 are constants)

if $V_{in} = \cos\omega_c t + \cos\omega_m t$

$\therefore i = a_1(\cos\omega_c t + \cos\omega_m t) + a_2(\cos\omega_c t + \cos\omega_m t)^2$

or

$i = a_1\cos\omega_c t + a_1\cos\omega_m t + a_2\cos^2\omega_c t + 2a_2\cos\omega_c t\cos\omega_m t + a_2\cos^2\omega_m t$

$$i = a_1\cos\omega_m t + \boxed{a_1(1+\frac{2a_2}{a_1}\cos\omega_m t)\cos\omega_c t} + a_2\cos^2\omega_c t + a_2\cos^2\omega_m t$$

The second term of the right-hand side of the last equation (inside the rectangle) is the AM wave with $A = a_1$ and $k = 2a_2/a_1$. This wave can be separated from the other components of the last equation by using a Band Pass Filter after the diode.

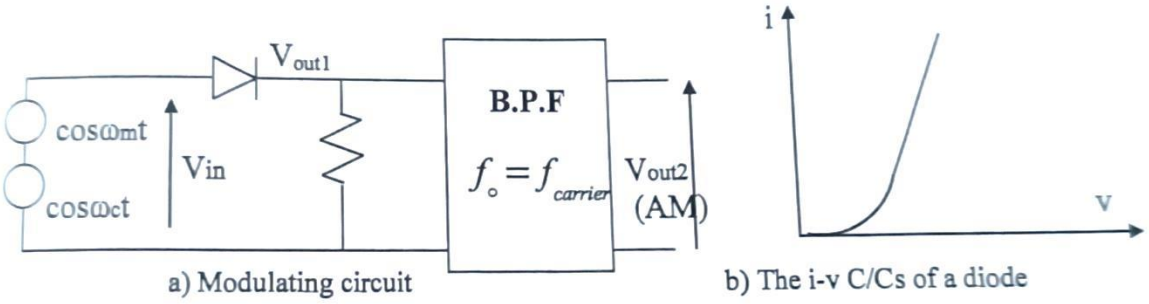

a) Modulating circuit

b) The i-v C/Cs of a diode

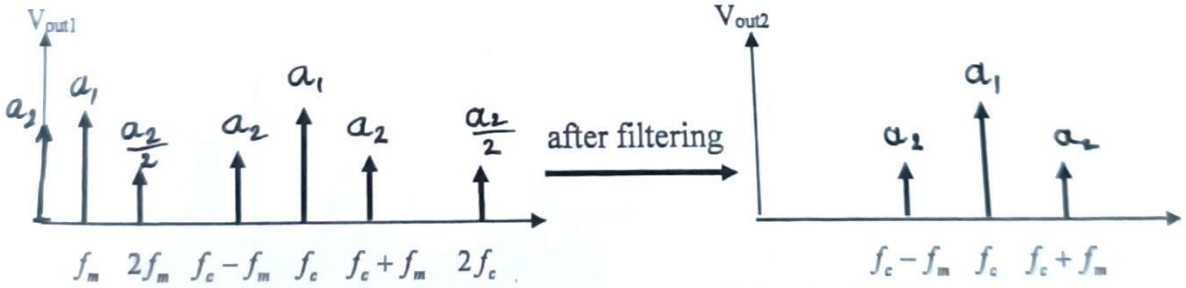

c) Amplitude-frequency spectrum at the cathode of the diode

d) Amplitude-frequency spectrum after filtering (AM wave)

Fig 3.6: AM modulator using the Diode as a square law device.

Thus, after filtering the signal will be:

$$i = a_1(1+\frac{2a_2}{a_1}\cos\omega_m t)\cos\omega_c t \quad \text{.....(3.11)}$$

As can be seen from Figure (3.6), the bandwidth of the AM wave produced by this modulator is $BW = 2f_m$. This modulator is used to modulate small signals. The FET transistor can also be used as a square-law modulator as shown in Figure (3.7).

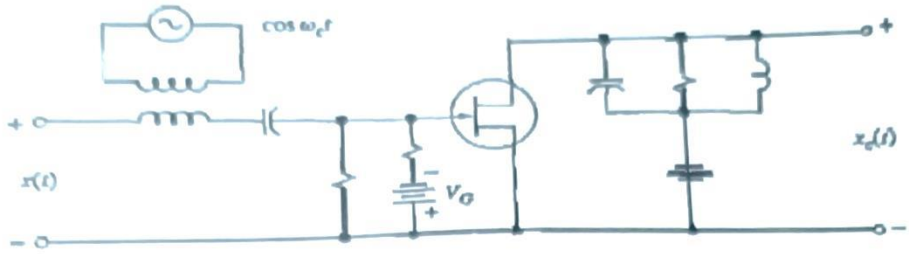

Fig 3.7: AM modulator circuit using FET as a square-low device.

In the AM modulator shown in Fig. (3.7), the input transformer adds the ***carrier signal*** to the ***modulating signal***, and then the resultant signal is coupled to the FET transistor through the capacitor C. The battery VG serves to bias the FET into its ***saturation region*** where its square-law characteristic. The parallel RLC circuit, which is a band pass filter, transmits only the desired AM wave components to the output.

b)High-Level Modulators:

For large power transmitter requiring good linearity, ***anode modulation*** is usually employed. The complete AM transmitter is diagramed as a block diagram in Fig.3.8. The ***carrier wave*** is generated by a ***crystal-controlled oscillator*** to ensure stability of the carrier frequency. The ***modulating signal*** is amplified by a ***class B*** audio amplifier which drives a ***class C R.F amplifier***. This last stage serves as an **AM** modulator. The output is rich in harmonics and by using a tuned load (called ***tank circuit***); a fairly undistorted AM signal may be obtained with efficiency of 80%.

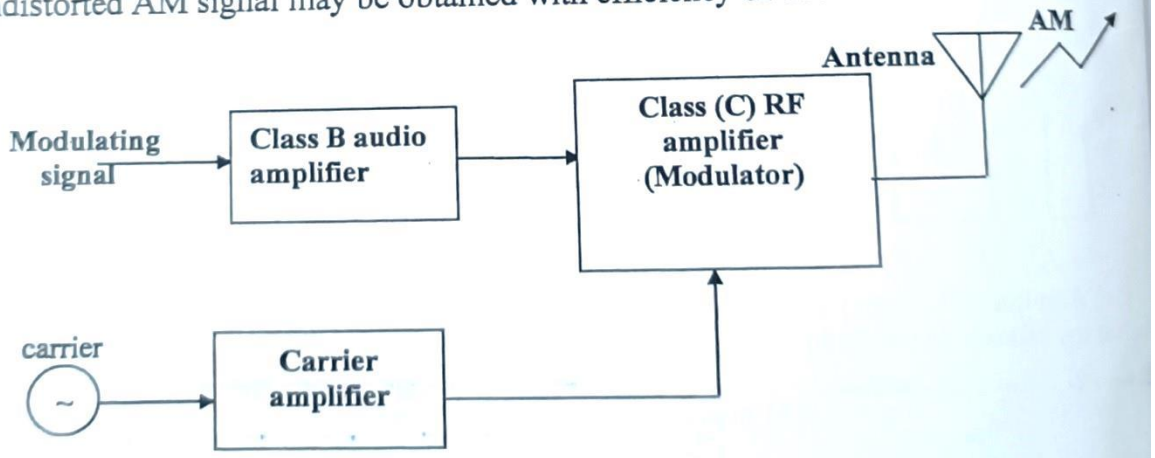

Fig 3.8: AM transmitter with High-Level Modulation.

DSB-SC Modulators:

a)Product Modulator: To produce a ***DSB-SC*** signal, the term corresponds to the carrier signal in eq. (3.6) must be eliminated, i.e.:

$$V_{DSB-SC} = \frac{kA}{2}\cos(\omega_c - \omega_m)t + \frac{kA}{2}\cos(\omega_c + \omega_m)t \quad \text{.....(3.12)}$$

$$V_{DSB-SC} = B\cos(\omega_m t)\cos(\omega_c t) \quad \text{.....(3.13)}$$

Thus, DSB-SC modulators need only a multiplier which multiplies two analogue signals as shown in Figure (3.9).

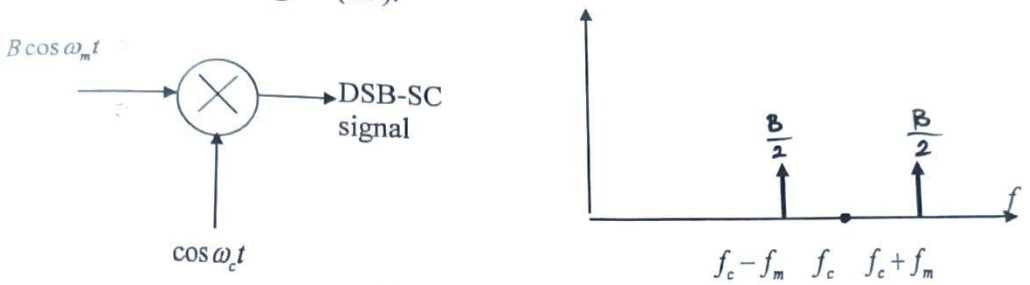

Fig. 3.9: Product Modulator.

The bandwidth of ***DSB-SC*** signal is: $(B.W)_{DSB-SC} = 2f_m$

b) Balanced Modulators:

Practically, ***DSB-SC*** signals are obtained by using two conventional AM modulators (such as square-low modulators) arranged in a balance configuration to cancel out the carrier. Figure 3.10 shows a schematic diagram of a simple ***Balanced Modulator***.

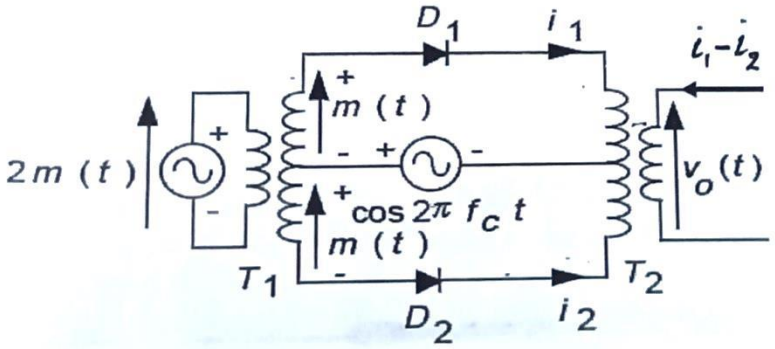

Fig.3.10: Balanced Modulator.

Each diode is a nonlinear device. Thus, both currents i_1 & i_2 are AM waves consisting of carrier and two sideband signals. Both carriers of i_1 & i_2 are in phase, therefore they are cancelled out as they pass through the secondary of the output

transformer (since the current flowing in the secondary coil of the transformer is i_1-i_2). The two sidebands of i_1 & i_2 are 180° out of phase, therefore they will be added at the secondary of the output transformer. Hence, the resultant current (i_1-i_2) consists only the sidebands components as shown in Fig.3.11.

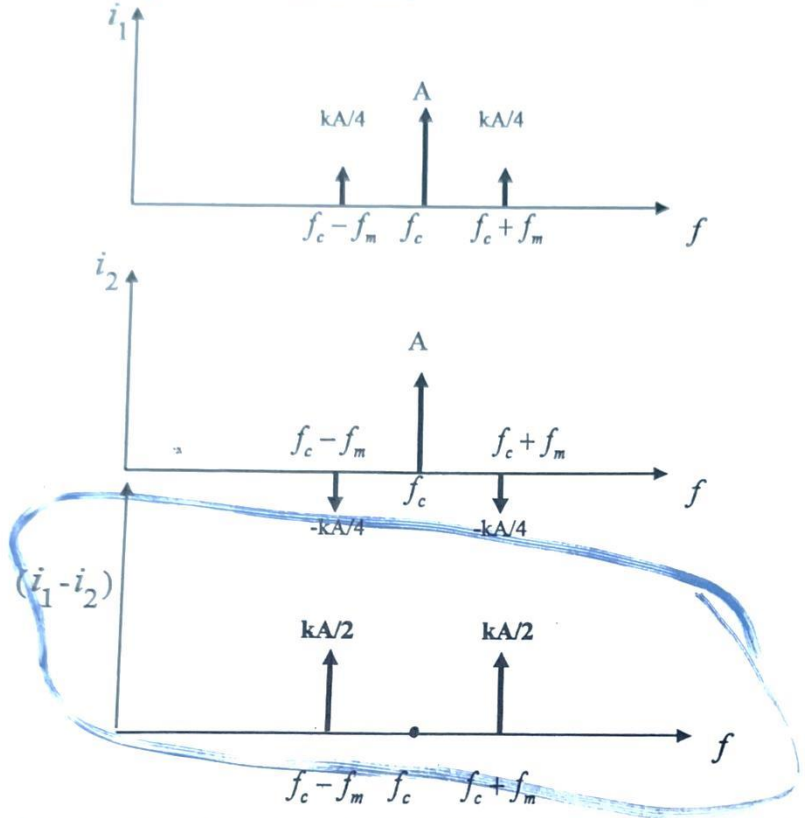

Fig. 3.11: Amplitude-frequency spectrum for the currents i_1, i_2, and i_1-i_2 of the Balanced Modulator

From Figure 3.11, we can write the resultant current i_1-i_2 flowing in the secondary of the output transformer as:

$$\therefore i_1 - i_2 = \frac{kA}{2}\cos 2\pi(f_c + f_m)t + \frac{kA}{2}\cos 2\pi(f_c - f_m)t \quad \text{.....(3.14)}$$

It is clear from eq. (3.14) that the bandwidth is $\text{B.W} = 2f_m$. Fig. 3.12 depicts two of practical Balanced Modulators. They are ***Bridge-type*** and ***Ring-type Balanced Modulators*** respectively.

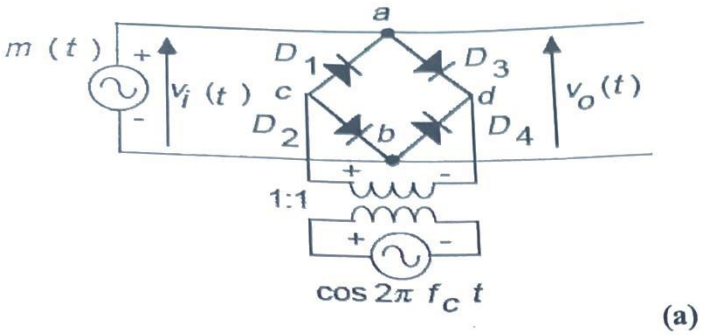

(a)

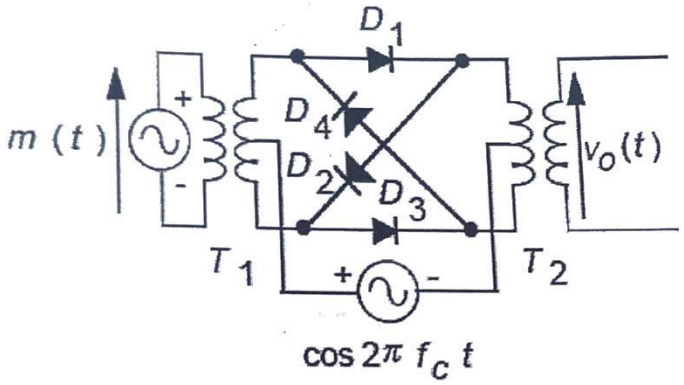

(b)

Fig. 3.12: Practical Balanced Modulators: a) Bridge type b) Ring type

SSB-SC Modulators:

a)Filtering method: By filtering out one of the side bands of the ***DSB-SC*** signal, the ***SSB-SC*** is produced. Thus, eliminating one of the terms in equation (3.12) yields:

$$V_{SSB-SC} = \frac{kA}{2}\cos 2\pi(f_c \pm f_m)t \quad \text{.....(3.15)}$$

Fig. 3.13 depicts the ***SSB-SC*** modulators. The filter is a band pass circuit passing either the upper sideband ***(USB)*** or the lower side band ***(LSB)***. Such filter must have a flat pass band characteristic and extremely high attenuation outside the pass band. Notice that the bandwidth of the modulated signal produced by this method is $B.W_{SSB-SC} = f_m$.

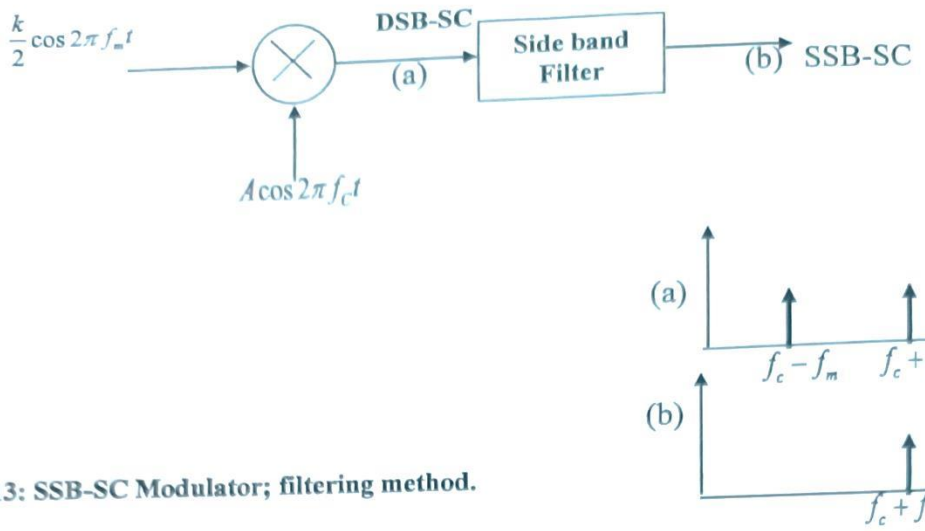

Fig. 3.13: SSB-SC Modulator; filtering method.

b) Phase Shift method:

In this method (see Figure 3.14), two ***DSB Balanced modulators*** are used. The first one modulates its carrier by the modulating signal. The other modulator modulates the quadrature carrier, a carrier signal shifted by 90° i.e., $\sin 2\pi f_c t$, by a 90° shifted modulating signal.

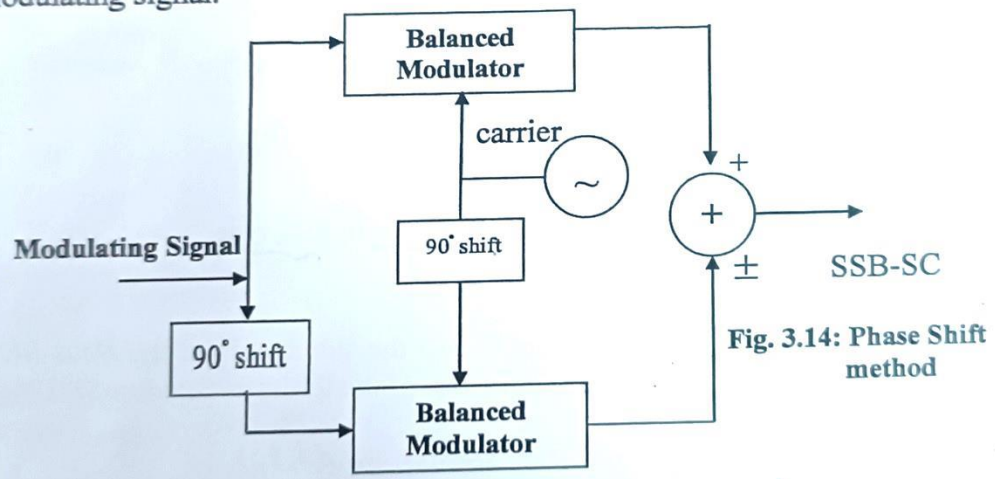

Fig. 3.14: Phase Shift method

AM Transmitters:

Amplitude-modulated (AM) transmitters are mostly used for the broadcast of speech or music in radio transmission. In TV broadcasting, AM signal is used to transmit the video signal. In radio transmission, these transmitters either operate on the broadcast band (535~1605 KHZ) or medium-wave band. When used for long distance transmission such as overseas broadcast, these transmitters operate on high frequencies between 3 and 30 MHZ and are known as ***"HF"*** transmitters or ***"Short-Wave (SW)"*** transmitters. Fig.3.15 is a block diagram of an amplitude-modulated transmitter.

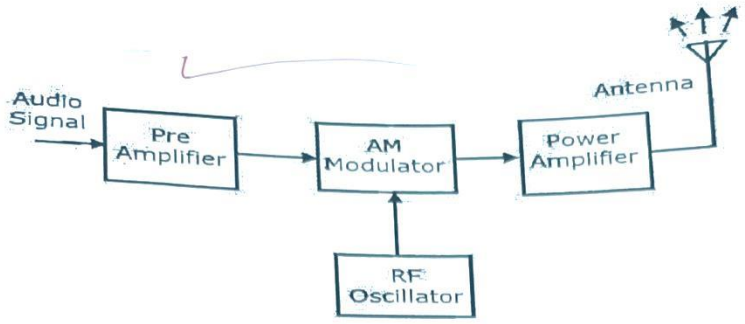

Fig. 3.15: Block diagram of an AM transmitter.

AM transmitter takes the audio signal as an input and delivers amplitude modulated wave to the antenna as an output to be transmitted. In commercial broadcasting, each broadcasting station is assigned a 5KHZ for each of the upper and lower side bands, i.e., the bandwidth is 10KHZ. The 5KHZ band is sufficient to cover the information content of speech and music frequencies.

Home work:

1) Write the expression of the output signal for the system shown below.

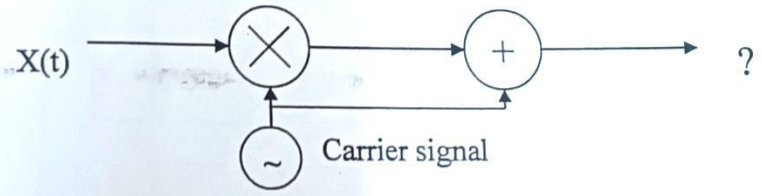

Where X(t) is the modulating signal.

2) calculate the percentage Modulation index (K) for the following wave.

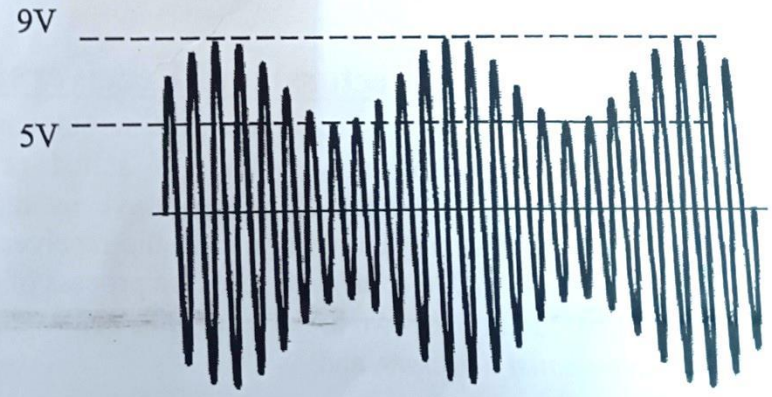

Then find the amplitudes of the carrier and the modulating signal, i.e., find **A** and **B**.
How can we increase the modulation index for this AM signal?

3.1.1.4 AM Demodulators (Detectors) and Receivers:

AM Demodulators (Detectors): In the transmitter, the modulation process takes place so that the message (the modulating signal) is suited properly to the communication channel. After receiving the modulated wave by the receiver, the ***Demodulation (Detection)*** process must be performed in the receiver to recover the message. Thus, the ***Demodulation (Detection)*** is the inverse process of modulation.

Demodulators (Detectors) fall into the two broad categories of:

1) ***Envelope (Asynchronous) detectors***, and
2) ***Synchronous detectors.***

1) Envelope (Asynchronous) detectors:

Envelope detectors are the simplest and the most popular used detectors. Examination of the amplitude- modulated carrier in Fig.3.2 indicates that we can recover the information from the modulated carrier by rectifying and then low pass filtering the modulated carrier wave as illustrated in Fig.3.17. The effect of the capacitor on the output is to bridge from the peak of one pulse to the peak of the next pulse. With proper choice of RC time constant, we can get an approximation to the original information signal.

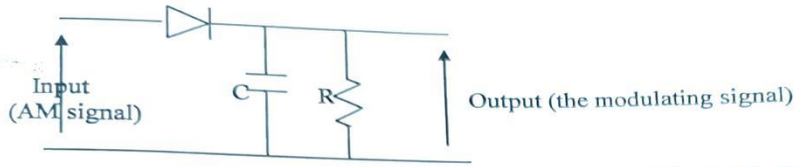

Fig 3.17: Envelope detector

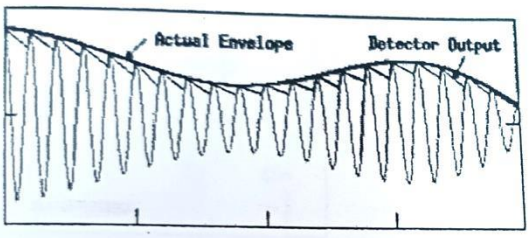

The output of the ***Envelope detector*** has a D.C level in addition to the approximated information wave. This D.C voltage is useful. It can be used in a feedback loop to control the gain of the preceding stages. This system of feeding back a part of the output of the detector is called ***"Automatic Gain Control"*** or ***"AGC"***. Fig.3.18 illustrates the circuit of ***AGC***. In this circuit the ***AGC*** voltage is developed across C_1 by filtering out the modulating signal by a low pass filter R_1 & C_1.

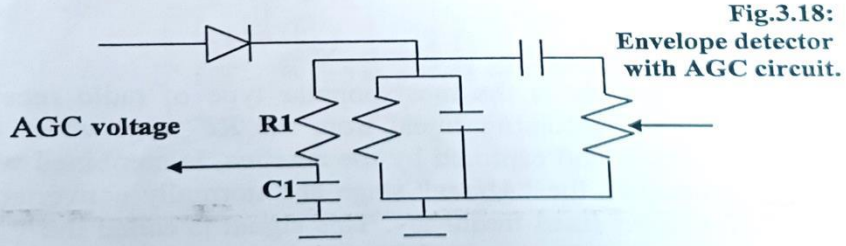

Fig.3.18: Envelope detector with AGC circuit.

2) Synchronous detector:

Fig. 3.19 shows the block diagram of the ***Synchronous (Product) detector***. This detector detects the information from the ***DSB-SC*** signal. First, the incoming signal is multiplied by a ***Local Oscillator (L.O)***. This oscillator must have the same frequency and in phase with the transmitted carrier, i.e., it should be synchronized with the

carrier that is used at the transmitter. The output of the multiplier is then low pass filtered to develop the approximated information at the output. Mathematically, we can write:

$V_{in} = \alpha(cos2\pi f_m t)(cos2\pi f_c t)$ ***input signal as DSB - SC***

$V_{o1} = \alpha(\cos 2\pi f_m t)(\cos^2 2\pi f_c t)$

According to the trigonometric identity

$$\cos^2\theta = \frac{1}{2}(1+\cos 2\theta) \quad \ldots\ldots(3.16)$$

$$\therefore V_{o1} = \frac{\alpha}{2}(1+\cos 4\pi f_c t)(\cos 2\pi f_m t) \quad \ldots\ldots(3.17)$$

After the filter $V_{o2} = \frac{\alpha}{2}(cos2\pi f_m t)$ $\ldots\ldots(3.18)$

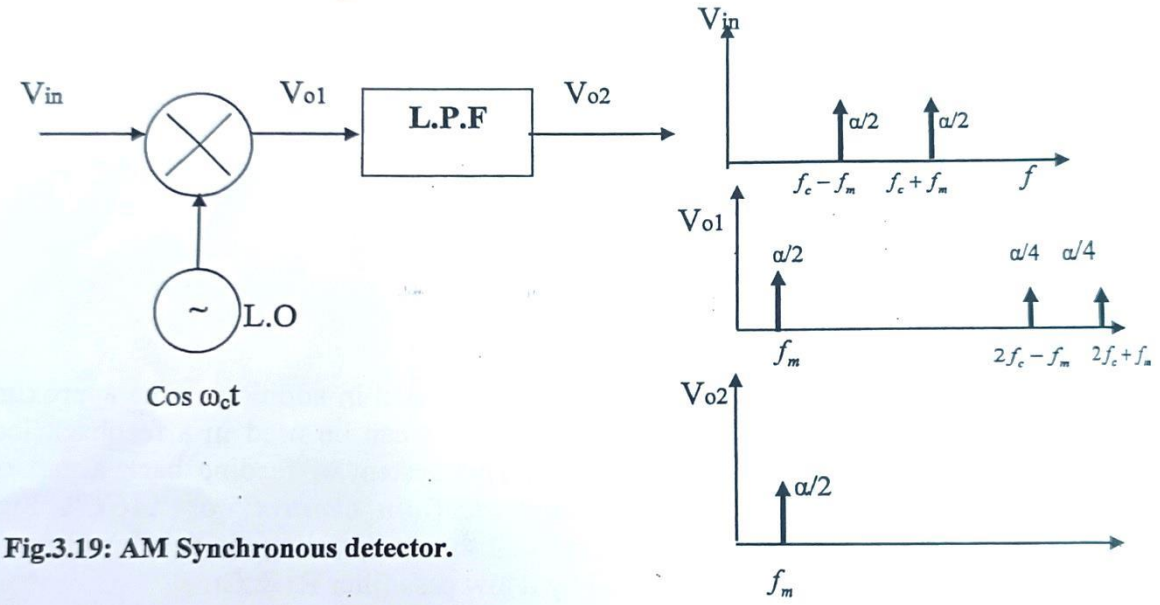

Fig.3.19: AM Synchronous detector.

AM Receivers:

The Superheterodyne receiver:

The ***Superheterodyne*** receiver is the most popular type of radio receiver. In this receiver, see Fig. 3.20, the incoming signal from the ***RF*** stage which is the tuned signal of the desired station and captured by the antenna, is combined with the local oscillator (L.O) frequency in the ***"Mixer"*** stage and normally converted into a new modulated signal of a lower fixed frequency. This signal is called the ***"Intermediate Frequency (IF)"***. It contains the same information as the original modulated carrier. This signal is then amplified in the ***"IF Amplifier"*** stage and then detected by the ***"Detector"*** stage to produce the original information. Thus, the ***IF*** signal will have a fixed bandwidth (10KHZ) when passed through the two stages: ***IF Amplifier*** and ***Detector***. The value of the IF frequency in ***AM Superheterodyne*** receiver is always:

$$f_{LO} - f_{carrier\ of\ station} = 455KHZ$$

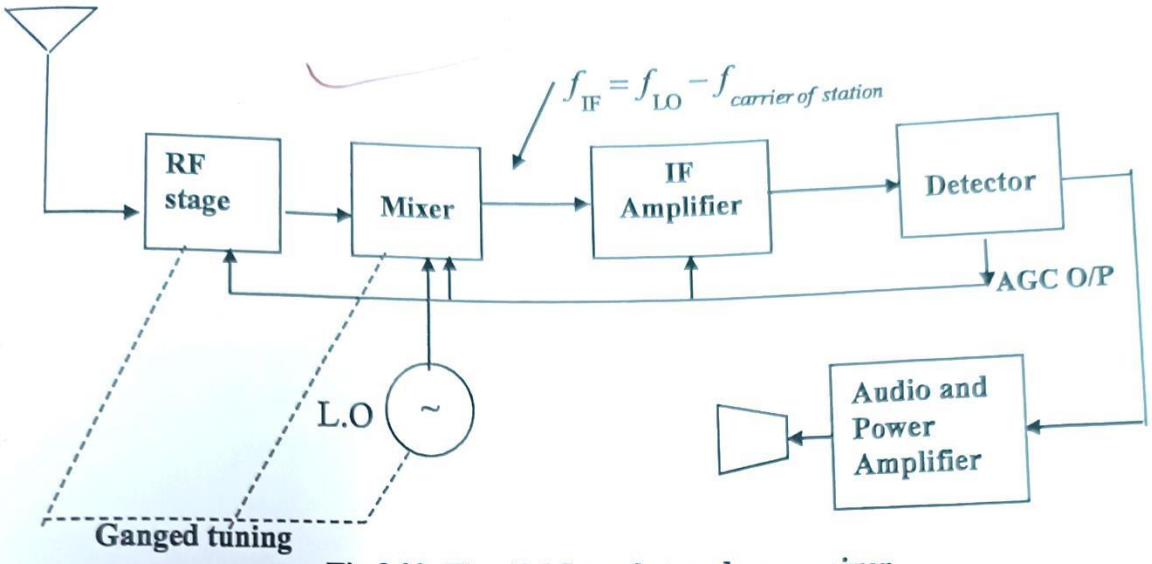

Fig.3.20: The AM Superheterodyne receiver.

Figure 3.21 shows a detailed circuit diagram of AM Superheterodyne receiver.

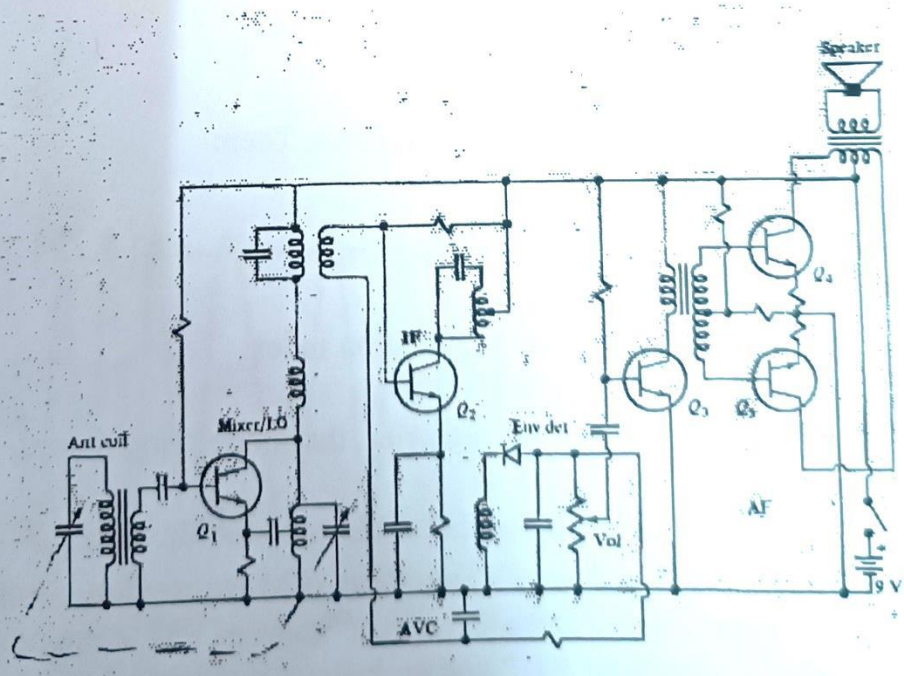

Fig. 3.21: Schematic diagram of AM Superheterodyne receiver.

الاسئلة البعدية

P2.1) What are the type and the cut-off frequency of each of the following filters?

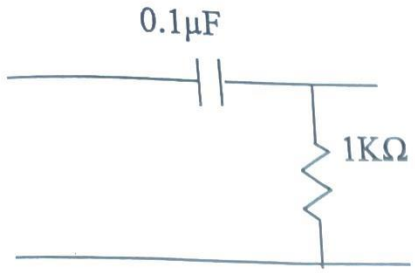

a)

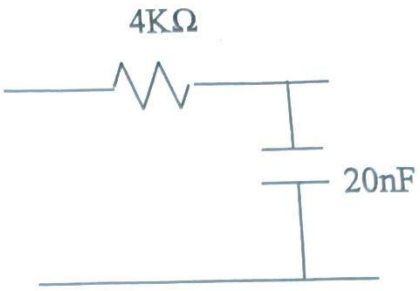

b)

Solved problems

P2.4) Design an R-C Active Low Pass Filter to have cut-off frequency of 3KHZ and passband gain of -10. Sketch the circuit and the variation of A_c versus frequency.

Solution:
Let us choose $C=0.01\mu F$.

$$f_c = \frac{1}{2\pi C R_f}$$

$$\therefore \quad R_f = \frac{1}{2\pi C f_c} = \frac{1}{2\times 3.14\times 0.01\times 10^{-6}\times 3\times 10^{3}} = 5305\Omega$$

$$\text{since } A_{\omega} = 10 = \frac{R_f}{R_i}$$

$$\therefore \quad R_i = \frac{5305}{10} \cong 530\Omega$$

