وزارة التعليم العالي والبحث العلمي
الجامعة التقنية الشمالية
اسم التشكيل :- المعهد التقني الدور

الحقيبة التعليمية

قسم التقنيات الالكترونية

اسم المقرر:	الانصالات 2
المرحلة / المستوى:	الثاني
الفصل الدراسي:	الثاني
السنة الدراسية:	2025/2024



معلومات عامة

اسم المقرر:	الاتصالات						
القسم:	التقنيات الالكترونية						
الكلية: المعهد	المعهد التقني الـدور						
المرحلة / المستوى	الثاني						
الفصل الدراسي:	الثاني						
عدد الساعات الاسبوعية:	نظري	2	عملي	2			
عدد الوحدات الدراسية:	8						
الرمز:	EOTO 219						
نوع المادة	نظري		عملي		كلهما	*	
هل يتوفر نظير للمقرر في الاقسام الاخرى	كـلا						
اسم المقرر النظير	-						
القسم	-						
رمز المقرر النظير	-						
معلومات تدريسي المادة							
اسم مدرس (مدرسي) المقرر:	حسن زين العابدين ساقي						
اللقب العلمي:							
سنة الحصول على اللقب							
الشهادة :	مـاجسـتيـر						
سنة الحصول على الشهادة	2022						
عدد سنوات الخبرة (تدريس)	18						

الوصف العام للمقرر

يكتب في هذا الجزء وصفاً عاماً و ملخصاً للمقرر الدراسي :-

الالمام العام بمفهوم الاتصالات التناظرية والرقمية وكيفية معالجة الاشارات وتعرف على الوسط النقل واخذ بنظر الاعتبار جميع المؤثرات الخارجية .

الاهداف العامة

- **التعريف بقوانين الاتصالات التناظرية والرقمية**
- **الالمام بأنواع التضمين لكلا نوعين من الاتصالات**
- **تحليل المسائل وايجاد الفرق بينهما من الناحية النظرية والعملية**

الأهداف الخاصة

- ترتبط بمقرر دراسي معين أو بوحدة دراسية محددة .
- تمتاز بأنها أهداف قصيرة الأمد إلى حد ما ، تحدد بدقة توضح ما يجب أن يتعلمه المتعلم من دراسة مقرر معين أو القيام بنشاط معين .
- تكون صياغة الأهداف التعليمية أكثر تحديداً وتخصيصاً من الأهداف التربوية .
- تصف سولك نوعي يحدد الأداء النهائي الذي يصدر عن المتعلم الذين ينجحون في تعلم السلوك المرغوب .

أمثلة الأهداف التعليمية .

تنمية الملكة الحسابية لدى الطالب لدوائر الاتصالات واكسابه مهارة كيفية حل المشكلات من خلال الفهم وتأهيليه الى تقديم الاستشارة والتطور العلمي لمستوى اكاديمي اعلى.

الأهداف السلوكية او نواتج التعلم

- **ان يدرك الطالب اهمية منظومة الاتصالات كونه يمثل المفاهيم الاساسية لتطور التكنولوجي .**
- **ان يميز الطالب بين الاتصالات التناظرية والاتصالات الرقمية وبيان مدى التوافق والاختلاف بينهما.**
- **ان يكون الطالب قادراً على تقديم الاستشارة بشكل هندسي مع اثبات ذلك بالأدلة والبراهين .**

((أمثلة أهداف تدريسية)) :- بعد الانتهاء من الدرس (المحاضرة) سيكون الطالب قادرا على ان

- يعرف بالقواعد المتعلقة بالتضمين .
- يعرف بالقواعد المتعلقة بالفرقة بين التضمين التناظري والتضمين الرقمي .
- يعرف بخواص الدوائر منظومة الاتصالات لكلا النوعين .
- يعرف بأنواع الاشارات وتأثيرات العوامل الخارجية لها.
- يعرف على الترددات الموجية لمنظومة الاتصالات .

المتطلبات السابقة

- اذكر أي متطلبات سابقة قد يحتاجها الطالب قبل التسجيل في المقرر، مثل مواد دراسية سابقة أو مهارات معينة.
- **شرح انواع مرشح الترددات في الالكترونيات**
- **الوجيز في شرح الحزام والانطاق لترددات في منظومة الاتصالات**
- **الوجيز في شرح انواع منظومة الانصالات التناظرية والرقمية**

الأهداف السلوكية او مخرجات التعليم الأساسية		
ت	تفصيل الهدف السلوكي او مخرج التعليم	آلية التقييم
1	معرفة الطالب انواع منظومة الاتصالات التناظرية والرقمية	• المحاضرات . • الواجبات الفردية والمشاركة . • حلقات النقاش والاختبارات .
2	اكتساب الطالب القدرة على تطبيق القوانين النظرية على الواقع	• البحث وتطوير المهارة من خلال الابحاث وحل القضايا ومتابعتها في المحاكم .
3	القدرة على تقديم الاستشارة الهندسية مع ضرورة اثبات ذلك بالأدلة والبراهين	• مشاريع فردية او جماعية . • اختبارات .
4	معرفة الطالب الفرق بين الترددات والنطاق الترددي	• مشاريع فردية او جماعية . • اختبارات .

أساليب التدريس (حدد مجموعة متنوعة من أساليب التدريس لتناسب احتياجات الطلاب ومحتوى المقرر)

الاسلوب او الطريقة	مبررات الاختيار
1-المحاضرات النظرية والعملية من خلال الشرح	محدد وواضح ويطبق بسهوله وهو التقليدي
2. التعلم التفاعلي والمتبادل	التفاعل بين الطلبة
3. التعلم القائم على الحجج والبراهين	اكتساب الطالب مهارة تفسير النصوص
4. المناقشة في نهاية المحاضرة	تقديم الخلاصة والفهم للموضوع

المقرر الدراسي :- اتصالات(2) المستوى الدراسي الثاني - الفصل الثاني

الاسبوع	الساعات	مخرجات التعلم المطلوبة	اسم الموضوع	طريقة التعلم	طريقة التقييم
1	4	المعرفة والتطبيق العملي	التضمين الرقمي PSK-FSK-ASK.	عملي + نظري	الاختبارات والتقارير
2	4	المعرفة والتطبيق العملي	معلومات الإرسال وسعة المنظومة –الخطأ نسبة الإشارة للضوضاء (SNR)	عملي + نظري	الاختبارات والتقارير
3	4	المعرفة والتطبيق العملي	الهواتف الخليوية-الترددات المستخدمه –التقنيات المستخدمة (FDMA)-(TDMA)– (CDMA) .	عملي + نظري	الاختبارات والتقارير
4	4	المعرفة والتطبيق العملي	دوائر التلغراف –(Teleprinters) –مرسلات التلغراف الراديوية.	عملي + نظري	الاختبارات والتقارير
5	4	المعرفة والتطبيق العملي	Fas-)– (FaximileTransmission) (Telex)-(Receiver المرسلة المستقبلة.	عملي + نظري	الاختبارات والتقارير
6	4	المعرفة والتطبيق العملي	الألياف البصرية- أنواعها- صفاتها- المرسلة والمستقبلة .	عملي + نظري	الاختبارات والتقارير
7	4	المعرفة والتطبيق العملي	أنواع الهوائيات –أساسيات الهوائيات-معاملات الهوائيات.	عملي + نظري	الاختبارات والتقارير
8	4	المعرفة والتطبيق العملي	انتشار الموجات الراديوية(الأرضية –السماوية- موجات خط البصر.	عملي + نظري	الاختبارات والتقارير
9	4	المعرفة والتطبيق العملي	الهوائيات العمودية-هوائيات قضيب الفرايت- هوائيات UHF الهوائيات المايكروية والبوقية.	عملي + نظري	الاختبارات والتقارير
10	4	المعرفة والتطبيق العملي	استخدام المايكروويف في الاتصالات.	عملي + نظري	الاختبارات والتقارير
11	4	المعرفة والتطبيق العملي	الاتصالات بالأقمار الصناعية-المميزات والخواص-الإرسال والاستقبال-المحطات الأرضية.-مدارات الأقمار الصناعية –الدخول المتعدد Multiple Access.	عملي + نظري	الاختبارات والتقارير

12	4	المعرفة والتطبيق العملي	الموجات المايكروية-توليدها-الطيف الترددي..	عملي + نظري	الاختبارات والتقارير
13	4	المعرفة والتطبيق العملي	الموبايل-مقدمة –التقنيات المستخدمة-أهم الاعتبارات في النقل-الظل-التداخل-الضوضاء.- نقل الإشارات لاسلكياً –لاسلكياً (ولاسلكياً-سلكياً)	عملي + نظري	الاختبارات والتقارير
14	4	المعرفة والتطبيق العملي	شبكات GSM ; الوظائف والهيكلية	عملي + نظري	الاختبارات والتقارير
15	4	المعرفة والتطبيق العملي	الثريا-خدمات الثريا-خصائص الثريا-SMS-استخدامات الثريا-المناطق الجغرافية لتغطية خدمة الشبكات.	عملي + نظري	الاختبارات والتقارير

المحتوى العلمي

خارطة القياس المعتمدة

المحتوى التعليمي	عناوين الفصول	الأهمية النسبية	الأهداف السلوكية					عدد الفقرات
			المعرفة	الفهم	التطبيق	التحليل	التقييم	
الفصل الثاني/ المستوى الثاني	انواع الاتصالات الرقمية ووسائط نقل الترددات ونظريات الكنولوجيا للاتصالات الرقمية	%100	%35	%25	%10	%10	%20	5

اولا / مخطط انسيابي للتدرب بواسطة الوحدة النمطية

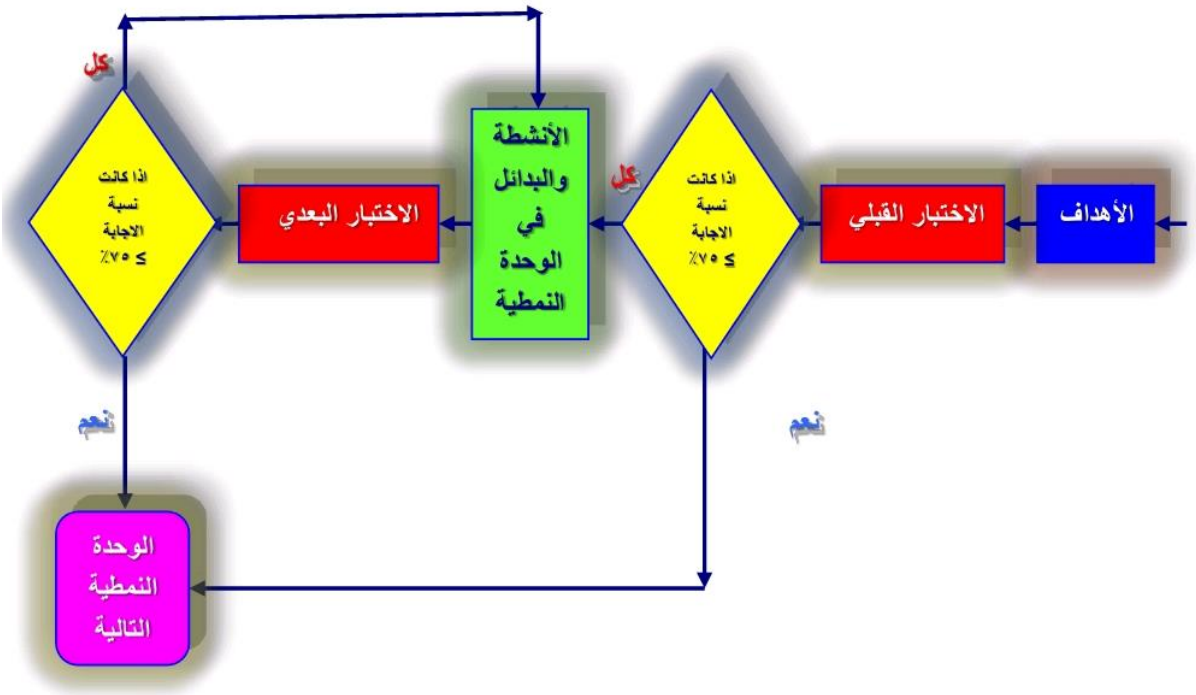

الاختبار القبلي

P3.9) Find the bandwidth of a PCM system used to transmit speech signal sampled at $f_s = 8000HZ$ and each sample is encoded into 7 binary digits.

Solution:

$v = 7$ as given

$\therefore Q = 2^7 = 128$ Levels

$$\therefore (B.W)_{PCM} = v \times f_m = v \times \frac{f_s}{2} = 7 \times \frac{8000}{2} = 28KHZ$$

P3.10) A speech signal is transmitted using PCM with sampling rate $f_s = 8000HZ$ and quantization levels Q = 32. Find the bit rate in bits/sec. & the bandwidth required to transmit the code over AM channel.

Solution:

Since $Q = 32$ as given, then

$Q = 2^v \Rightarrow 32 = 2^v \Rightarrow 2^5 = 2^v$

$\therefore v = 5$ i.e. each pulse is encoded into 5 bits. Then

$$T_S = \frac{1}{f_s} = \frac{1}{8000} = 125\mu s$$

$$\therefore \text{The time occupied by each bit is } t_b = \frac{125 \times 10^{-6}}{5} = 25\mu s$$

ثالثاً / عرض الوحدة النمطية

المقدمة

الاتصالات الرقمية هي الاتصالات التي تتعامل بمبدأ النظام الثنائي .يتصف هذا النوع من الاتصالات بقوتها وجودتها العالية مقارنة بالاتصالات التناظرية؛ حيث أن هناك ما يسمى بالضوضاء الكهرومغناطيسية في الطبيعة، هذه الضوضاء تسبب تشوشًا في الإشارة التناظرية التي تعتمد على شدة التيار وترددة، لكن في حالة استخدام النظام الثنائي، فإن الإشارات تحسب بمرور نبضة أو عدم مرورها، فلا تتأثر بالتشويش الذي تسببه الضوضاء الكهرومغناطيسية.

من أمثلة الأجهزة التي تعتمد الاتصالات الرقمية :التلفاز الرقمي، اتصالات السواتل، والحواسيب .يشار إلى إن الإشارات الرقمية تنتج من تقطيع الإشارات التناظرية إلى أجزاء كل جزء يمثل هو يمثل مجموعة من 0 و 1 وتسمى أيضا بتقنية الدجيتال) بالإنجليزية(digital : ويمكن التحويل من النظام الثنائي إلى النظام التناظري عن طريق جهاز يعرف بالمحول الثنائي التناظري، والتحويل من التناظري إلى الثنائي عن طريق المحول التناظري الثنائي، أما عن طريقة التحويل من كلا النظامين إلى الآخر دون استخدام أجهزة التحويل سالفة الذكر باستخدام طريقة التحويل اليدوية فقد استخدمت هذه الطرق في التعليم وفي التطبيق العملي للتحويل حال عدم وجود هذه الأجهزة، فعن الطريقة تحويل من النظام الثنائي إلى عشري كالتالي: تحويل 1.1.0.0.1 من النظام الثنائي إلى العشري يتم وضع قيمة صغرى فوق العدد بدأ من صفر وانتهاء بعشرة: فقيمة الرقم 1=0 و 1=0 و 2=0 و 3=1 و 4=1 ويتم جمع الأعداد التي لها قيمة (أي تملك الرقم (1) فينتج من النظام الثنائي 1.1.0.0.1 العدد العشري 7 وللتحويل من النظام العشري إلى الثنائي نقسم العدد على (2) فإذا كان هناك باقي للقسمة نعطي الرقم 1 وإلى 0 كالتالي: تحويل الرقم 7 من النظام العشري إلى الثنائي: بتقسيم العدد 7 على 2 ينتج 3 والباقى 1 وبتقسيم العدد 3 على 2 ينتج 1 والباقي 1 وهكذا حتى ينتج 1.1.1

3.1.2: Frequency Modulation (FM):

Frequency Modulation is the process by which the frequency of the carrier is modulated (varied) by the modulating signal (information). In contrast with ***AM*** modulation, the amplitude of the carrier in ***FM*** is kept constant. The first practical system was put forward in 1936 as an alternate to ***AM*** in effort to make radio transmission more resistant to noise. (Normally the noise is superimposed on the peak of signals during transmission).

3.1.2.1: Mathematical representation of FM waves:

If the carrier signal has the following expression:

$$V_c = A\cos 2\pi f_c t$$

and its frequency is varied by the amplitude of a single tone modulating frequency which has the expression:

$$V_m = B\cos 2\pi f_m t$$

Then the frequency of the FM signal will be:

$$f_{modulated\ carrier} = f_c + (\Delta f)\cos 2\pi f_m t \quad \ldots\ldots\ldots\ldots (3.19)$$

Where, Δf is the peak frequency deviation in the frequency of the frequency-modulated carrier and it equals to:

$$\Delta f = QB \quad \ldots\ldots\ldots\ldots (3.20)$$

Where "Q" is a constant and its unit is HZ/Volt. Then:

$$V_{FM} = A\cos(2\pi f_c t + \beta \sin 2\pi f_m t) \quad \ldots\ldots\ldots\ldots (3.21)$$

Where, $\beta = \dfrac{\Delta f}{f_m}$ is the frequency modulation index.

The waveforms of the unmodulated carrier, the modulating signal, and the FM signal are shown in Figure 3.22.

The bandwidth of ***FM*** wave depends on the modulation index β. Analyzing the FM wave expression by using ***Bessel's functions*** (FM expression contains term of cosine of sine signal) reveals that the frequency spectrum of FM wave consists of the carrier frequency with amplitude of ***"J_o"*** and an infinite number of side bands at frequencies of $(f_c \mp nf_m)$ and with amplitudes of ***(J_1, J_2, J_3, ……J_n)*** where ***(J's)*** are the amplitudes of Bessel's Functions coefficients. Hence, depending on the value of β the bandwidth of FM wave has two types:

a) Narrow Band FM (NBFM):

FM wave with $\beta << (\pi/2)$ is called ***Narrow Band FM (NBFM)***. The expression of this signal is:

$$V_{NBFM} = A\cos\omega_c t - \frac{A\beta}{2}\cos(\omega_c - \omega_m)t + \frac{A\beta}{2}\cos(\omega_c + \omega_m)t \quad \ldots\ldots\ldots\ldots (3.22)$$

Equation 3.22 illustrates that the bandwidth of ***NBFM*** is twice the modulating signal band, i.e.:

$$(B.W)_{NBFM} = 2f_m$$

Just as with ***AM,*** the bandwidth of ***NBFM*** consists of the carrier frequency plus two side bands with each one is f_m apart from the carrier, (see Fig.3.23 a).

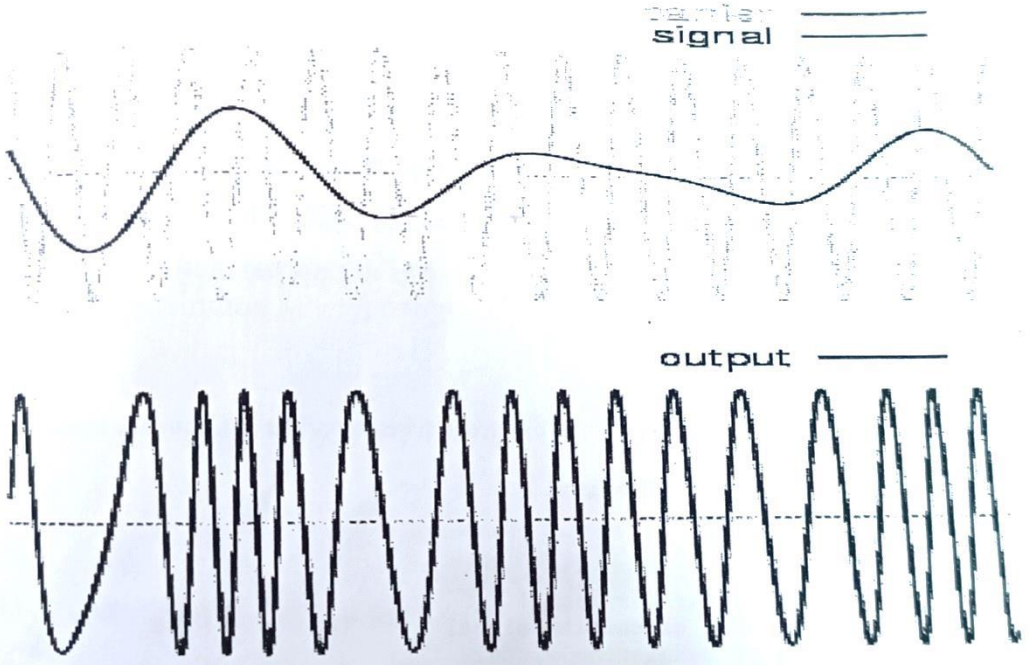

Fig. 3.22: FM signal.

b)Wide Band FM (WBFM):

When $\beta >> (\pi/2)$, the bandwidth of the ***FM*** wave will be very wide. As stated previously the amplitude-frequency spectrum will consist in addition to the carrier frequency, an infinite number of side bands (see Fig. 3.23b). The bandwidth of ***WBFM*** is:

$$(B.W)_{WBFM} = 2\Delta f \quad \ldots\ldots\ldots\ldots\ldots\ldots (3.23)$$

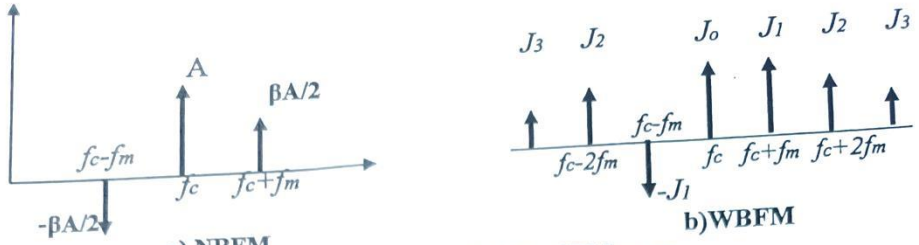

Fig.3.23: Bandwidth of FM wave.

In summary:

For $\beta << (\pi/2)$ the ***FM*** signal is ***NBFM*** and the bandwidth is $(\text{B.W})_{\text{NBFM}} = 2f_m$.

For $\beta >> (\pi/2)$ the ***FM*** signal is ***WBFM*** and the bandwidth is $(\text{B.W})_{\text{WBFM}} = 2\Delta f$.

The Carson's rule states that as a good approximation:

$$(B.W)_{FM} = 2(\Delta f + f_m) \quad \ldots\ldots\ldots\ldots\ldots\ldots (3.24)$$

This rule is used for $\beta > 6$.

In commercial ***FM*** broadcast, a maximum of frequency deviation $\Delta f_{max} = 75\text{KHZ}$ is allowed to use. For TV transmission, $\Delta f_{max} = 25\text{KHZ}$. The maximum frequency of the modulating signal used for commercial ***FM*** broadcast and TV transmission is $f_m = 15\text{KHZ}$ (The band 88~ 108MHZ is assigned for FM commercial broadcasting).

MATLAB example:

The following MATLAB code illustrate the FM wave when a carrier is frequency modulated by a modulating signal

```
% MATLAB code for plotting FM signal
clear all;
close all;

A=10;   % Peak value of carrier signal
fc=70;  % Frequency value of carrier signal
B=7;    % Peak value of modulating signal
fm=5;   % Frequency of modulating signal
f_delta=40
Beta=f_delta/fm;  % Modulation index

t=0:0.001:1;     % range of time

x_carrier=A*cos(2*pi*fc*t);  % The carrier signal
x_modu=B*cos(2*pi*fm*t);     % The modulating signal
x_FM=A*cos(2*pi*fc*t+Beta*sin(2*pi*fm*t)); % The FM signal

% Plotting all signals
subplot(3,1,1)
plot(t,x_carrier,'Linewidth',2)
title('The carrier signal')
```

```
grid minor

subplot(3,1,2)
plot(t,x_modu,'Linewidth',2)
title('The modulating signal')
grid minor

subplot(3,1,3)
plot(t,x_FM,'Linewidth',2)
title('The FM signal')
grid minor
```

The following plots will be obtained when this code is executed:

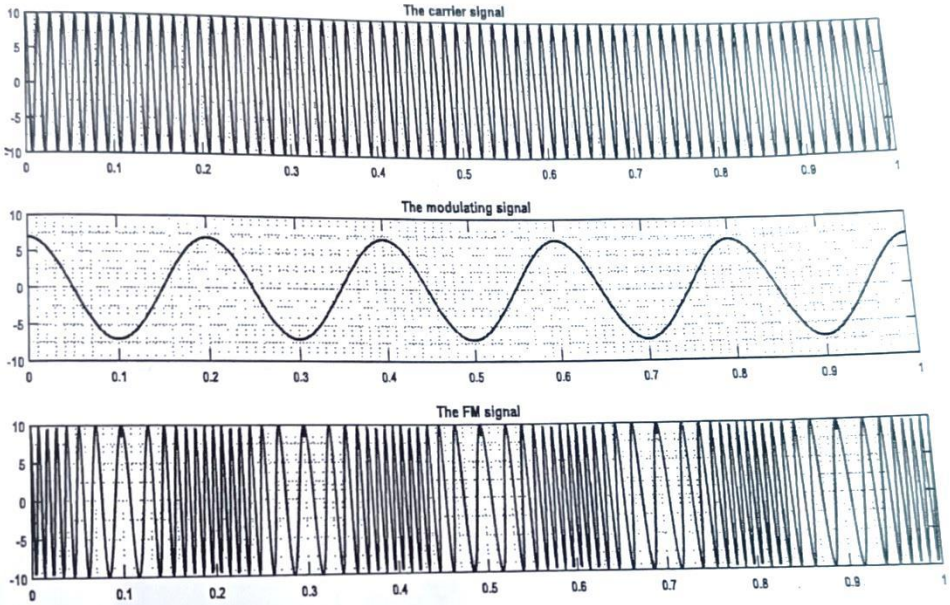

Solved problems

P3.5) FM signal is defined as:

$$V_{FM} = 10\cos\left(2\pi 10^6 t + 8\sin 2\pi 10^3 t\right)$$

Determine:

a) **The frequency of the carrier & the modulating signals.**
b) **The modulation index & peak frequency deviation.**
c) **The total average power of this signal.**

Solution:

a) Comparing the given expression with the one in eq 3.21, we can conclud

$$f_c = \frac{2\pi \times 10^6}{2\pi} = 10^6 HZ = 1MHZ$$

$$f_m = \frac{2\pi 10^3}{2\pi} = 1000HZ = 1KHZ$$

b) The modulation index β=8. The peak frequency deviation is:

$$\Delta f = \beta \times f_m = 8 \times 1 \times 10^3 = 8KHZ$$

c) The total power $= \frac{A^2}{2} = \frac{10^2}{2} = 50W$

P3.6) When a 10MHZ carrier is frequency modulated, the frequency deviation is to be 50KHZ. Determine the bandwidth for the following information (modulating signal) frequencies:

a) $f_m = 500KHZ$ ***b)*** $f_m = 500HZ$ ***c)*** $f_m = 5KHZ$

Solution:

a)

$$\beta = \frac{\Delta f}{f_m} = \frac{50KHZ}{500KHZ} = 0.1$$

$\because \beta << (\pi/2)$, therefore the signal is NBFM

$\therefore B.W = 2f_m = 2 \times 500KHZ = 1000KHZ = 1MHZ$

b) $\beta = \frac{\Delta f}{f_m} = \frac{50KHZ}{500HZ} = 100$

$\because \beta >> (\pi/2)$, therefore the signal is WBFM

$\therefore B.W = 2\Delta f = 2 \times 50KHZ = 100KHZ$

c)

$$\beta = \frac{\Delta f}{f_m} = \frac{50KHZ}{5KHZ} = 10$$

For this case we can use carson's rule to determine the bandwidth:

$$B.W = 2(f_m + \Delta f) = 2(5K + 50K) = 110KHZ$$

Home work:

1) Find the carrier frequency, modulating frequency, the modulation index, and the peak deviation for the FM wave represented by the expression:

$$V_{FM} = 12\cos\left(6 \times 10^8 t + 5\sin 1250t\right)$$

What will be the power of this signal?

3.1.2.2. FM modulators and transmitters:

FM Modulators:

1) Direct method: In this method, the modulating signal directly controls the carrier frequency. This process can be made by means of a device whose reactance can be varied by the amplitude of the modulating signal. The ***FM*** signal is generated when this variable controlled reactance device is placed across the frequency-determining tank circuit of an oscillator. Thus, this system is ***Variable Controlled Oscillator (VCO)***. Reactance modulators, such as ***vacuum tubes*** or ***transistors***, are used for this purpose, as are ***varactor diodes*** (also called ***varicaps***). Fig. 3.24 shows *VCO* circuit. It is seen that the diode has been reversed–biased to make use of its junction capacitance. This capacitance will be varied as the applied reverse-biased voltage changes. As can be seen from Fig.3.24, the modulating signal is in series with the biasing voltage and hence it will vary the value of the junction capacitance of the varactor diode. Hence the overall capacitance of the oscillator is directly controlled by the modulating signal. This can be illustrated mathematically as follows. Let the frequency of the oscillator be $f_\circ$ then:

$$f_\circ = \frac{1}{2\pi\sqrt{L(C \mp \Delta C)}} \qquad \text{.....(3.25)}$$

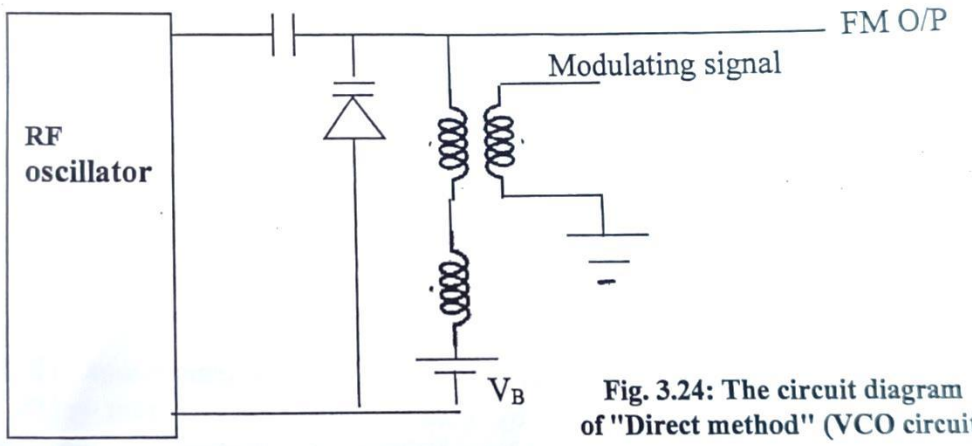

Fig. 3.24: The circuit diagram of "Direct method" (VCO circuit).

Where ΔC is the deviation in the value of the capacitance of the varactor diode. Thus, the change in biasing of the varactor diode due to the instantaneous positive and negative values of the modulating signal will deviate the frequency of the oscillator to $\pm\Delta f$ with:

$$\Delta f = f_o \frac{\Delta C}{2C} \qquad (3.26)$$

These modulators are readily implemented in the microwave band; $f_c > 3GHZ$. The principle advantage of the direct method is that large frequency deviations are possible without additional operations. The major difficulty with this method is that the primary oscillator cannot be crystal-controlled so that an automatic frequency control dependent upon feedback is needed. The solution for this problem is to use the ***Indirect method***.

2) Indirect method:

In this method, the input data is first integrated and then phase-modulated to produce the ***Narrowband FM signal (NBFM)***. The next step is to increase the modulation index to the desired values by means of ***Frequency Multiplication unit*** (see Fig. 3.25). Notice that the ***frequency multiplier*** unit multiplies both the carrier frequency and the frequency deviation by **n** times, whereas the ***mixer*** has no effect on the frequency deviation. The main advantage of this method over the direct method is that a ***crystal oscillator*** can be used since the deviation in its frequency is not directly produced at the main oscillator. This method is named ***"Armstrong system"*** after its inventor.

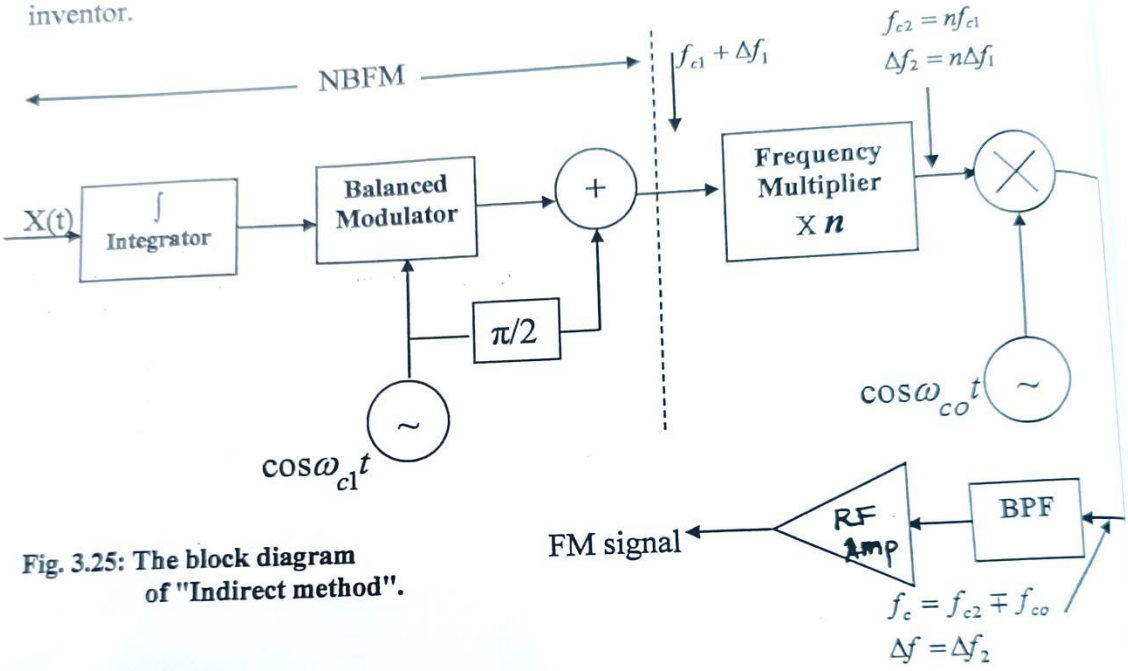

Fig. 3.25: The block diagram of "Indirect method".

FM transmitters:

Fig. 3.26 shows a block diagram of a simplified ***FM transmitter***. The FM signal is generated at the ***Exciter*** unit by mains of one of the two methods discussed previously. This unit is preceded by a unit called ***"Preemphasis Network"*** in which the higher frequencies of the information signal are boosted and correspondingly cut by the ***"Deemphasis Network"*** at the receiver. Hence, improvement immunity could be expected, see Fig. 3.27.

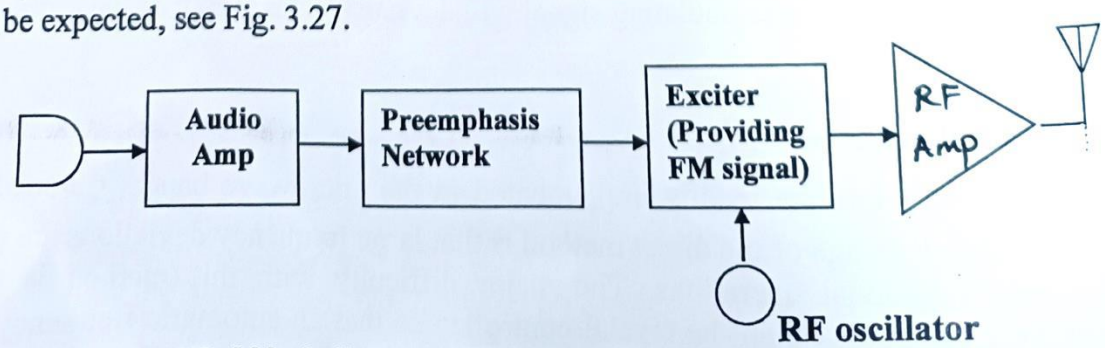

Fig. 3.26: **Simplified block diagram of FM transmitter.**

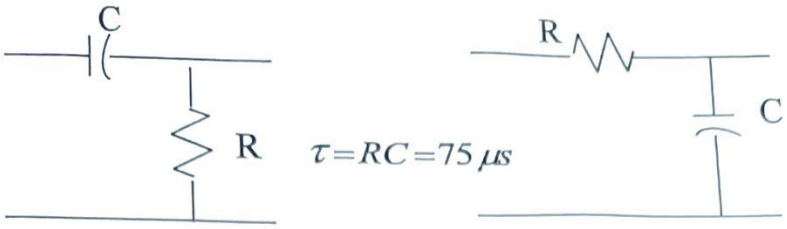

a) Preemphasis network b) Deemphasis Network

Fig. 3.27: Emphasis circuits.

3.1.2.3 FM Demodulators and Receivers:

A block diagram of a typical ***FM receiver*** covering the broadcast range of ***88 to 108MHZ*** is shown in Fig.3.28. Note that except for the ***Limiter*** and ***Deemphasis*** circuits, the form of the receiver is similar to that of a conventional ***AM Superheterodyne receiver***, since both of them employ heterodyning process. The ***IF amplifier*** is tuned to the center frequency of **10.7MHZ**. The ***Limiter*** unit is a double-ended clipping circuit (see Fig 3.29). It squares-off the lower and the upper extremities of the signal to remove the amplitude variations caused by the noise. The ***Deemphasis*** unit, in conjunction to the ***Preemphasis*** at the transmitter, provides additional discrimination against noise and interference.

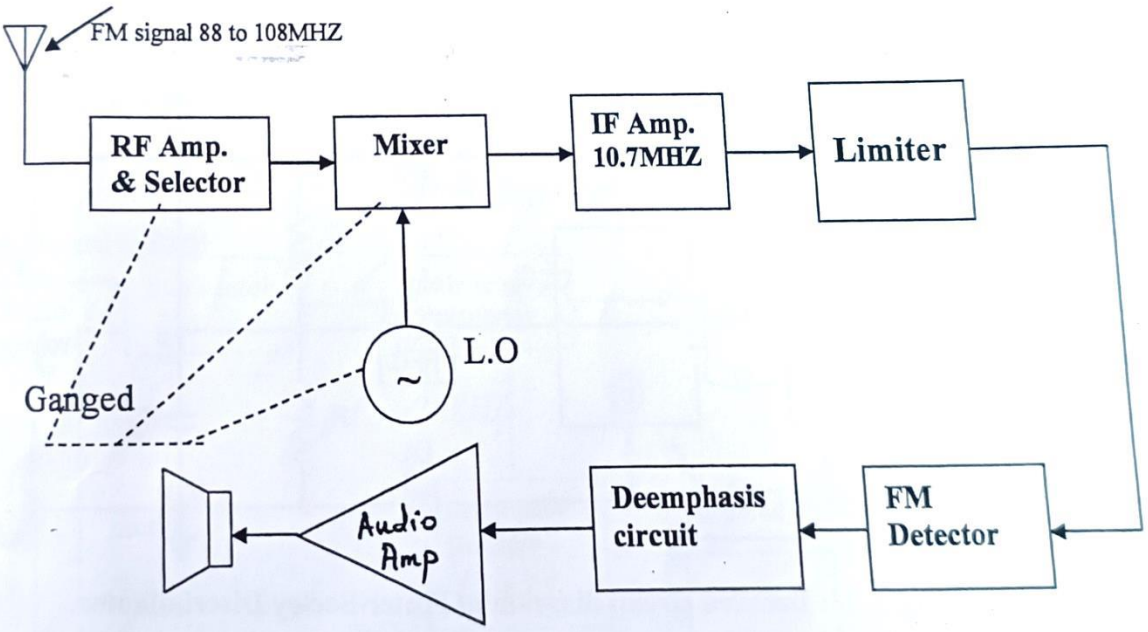

Fig. 3.28: The block diagram of FM Superheterodyne receiver.

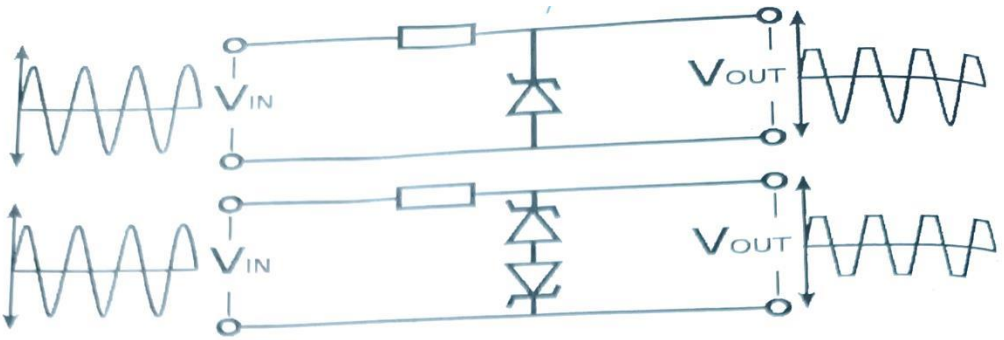

Fig. 3.29: Circuit diagram and waveforms of the Limiter (Clipper) unit.

The *Detector (Demodulator)* unit detects the modulating signal from the ***frequency modulated IF*** signal. This process can be carried out in a variety of methods. In general, a frequency detector, often called a ***Discriminator***, produces an output voltage that should vary linearly with the instantaneous frequency of the input. We will discuss two methods for detecting the modulating signal from FM signal:

1) ***The Foster-Seeley Discriminator (Phase Discriminator).***
2) ***The Ratio Detector.***

1) The Foster-Seeley Discriminator (Phase Discriminator):

The circuit of this detector is shown in detail as in Fig.3.30.

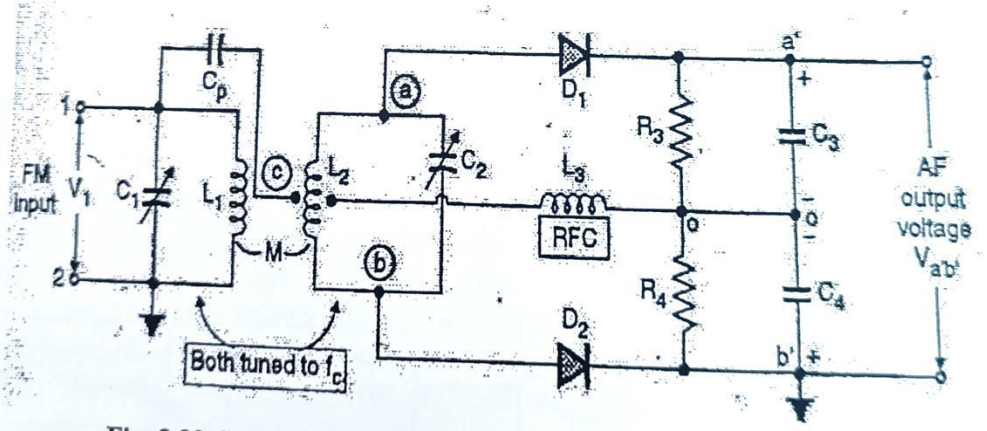

Fig. 3.30: Detailed circuit diagram of Foster-Seeley Discriminator.

The IF signal is directly applied at both coils; coil L1 and choke L3. The transformer T1 (at ©) phase-shifts the IF signal at its secondary coil L2. L2 together with the capacitor C2 form a series resonance circuit. This circuit produces a frequency sensitive phase-shifting voltage at (a) and (b). These voltages are combined with the original IF signal applied at L3 to form two AM signals applied at the anodes of diode D1 and diode D2. These AM signals are detected by the envelope detectors (D1, R3, and C3) and (D2, R4, C4) respectively to produce the Audio Frequency (AF) output.

2) The Ratio Detector:

By making a few changes in the ***Foster-Seeley Discriminator***, it is possible to have FM detector which has built in capability of limiting process. Fig. 3.31 depicts the circuit diagram of ***Ratio Detector***. L3 is a tertiary coil of T1 which replaces the choke L3 in Foster-Seeley Discriminator. Notice that the diode D2 has been reversed because of L3 being added. Because of these changes a capacitor, C9, can be added to serve as a Limiter.

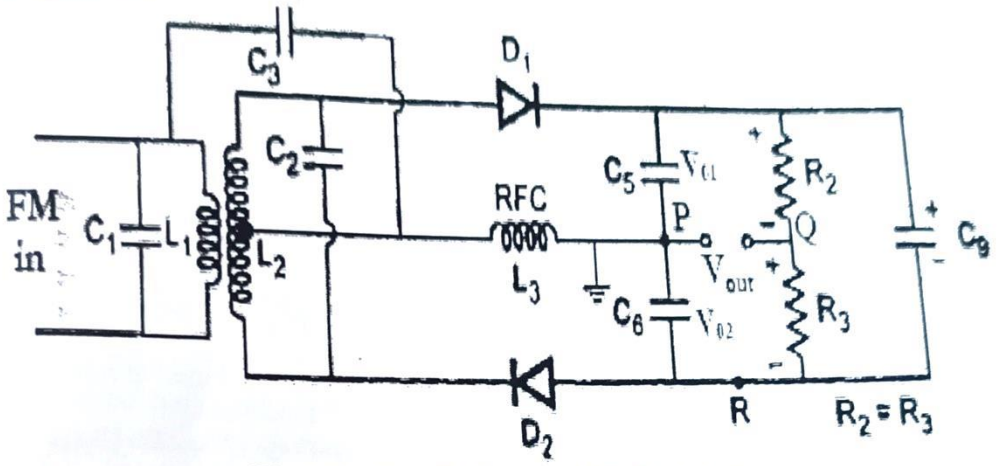

Fig 3.31: Circuit diagram of Ratio detector.

Solved problems

P3.7) Sketch the block diagram of Stereophonic FM transmitter.

Solution:

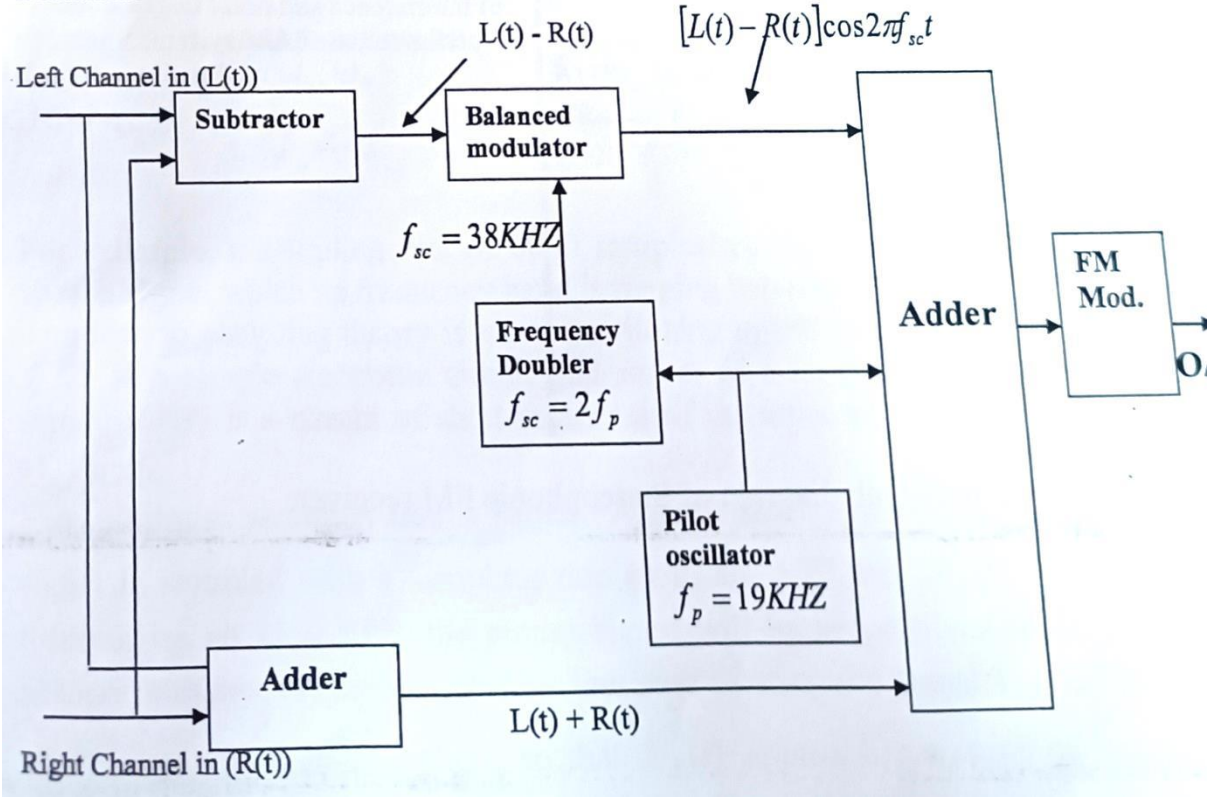

P3.8) Compare between AM and FM systems.

Solution:

FM	AM
1) The frequency of the carrier is varied according to the modulating signal. 1) تردد الحامل يتغير طبقا لاشارة	1) The amplitude of the carrier is varied according to the modulating signal 1) سعة الحامل تتغير طبقا لاشارة المعلومات.
2) It is a wide band system because large number of sidebands are produced. 2) عرض المجال الترددي واسع جدا بسبب تولد تولد مالانهاية من المجاميع الترددية الجانبية.	2) It is narrowband system because Only two sidebands are generated. 2) عرض المجال الترددي ضيق بسبب تولد مجموعتين ترددين جانبيتين فقط.
3) The S/N ratio is high. 3) نسبة الاشارة الى الضوضاء جيدة	3) The S/N ratio less than that of FM system. 3) نسبة الاشارة الى الضوضاء اقل مما هي عليه في منظومة FM
4) AFT circuit is used in FM receivers. 4) تستخدم دائرة مولف التردد الاوتوماتيكي في مستلمات التضمين الترددي.	4) AGC circuit is used in AM receivers. 4) تستخدم دائرة مسيطر الكسب الاوتوماتيكي في مستلمات التضمين الاتساعي.
5) The transmitting and the receiving equipments are complicated. 5) اجهزة الارسال والاستقبال معقدة.	5) The transmitting and the receiving equipments are simple. 5) اجهزة الارسال والاستقبال بسيطة.
6) Interference and noise have almost no effect on the performance FM systems. 6) تاثير التداخل والضوضاء قليلة على اداء منظومة التضمين الترددي.	6) Interference and noise degrade the performance of AM systems. 6) التداخل والضوضاء يؤثران على اداء التضمين الاتساعي.

Homework:

1) Sketch the block diagram of Stereophonic FM receiver.

3.2 Pulse Modulation:

In sections 3.1.1 and 3.1.2, we have discussed ***CW*** modulation in which the carrier is continuously modulated by the modulating signal. The carrier was sine or cosine wave. In this section, we will discuss another type of modulation; ***Pulse Modulation***, in which a discrete carrier signal is modulated by the modulating signal. Hence, the carrier is in the form of train of pulses. ***Pulse modulation***, therefore, employs ***sampling technique***. Thus, in sampling process, continuous waveforms are sampled at regular intervals. Hence, instead of transmitting continuous modulated carrier, modulated pulses or samples are transmitted. ***Pulse modulation*** can be classified into two types:

1) ***Analogue Pulse modulation***, which is similar to ***CW*** modulation. In this type, one of the pulse parameters, such as amplitude, width, or position is varied by the modulating signal.

2) ***Coded Pulse modulation***, which has no ***CW*** equivalent. In this type, the pulses are quantized and encoded to binary bits (bits).

Pulse modulation offers two main advantages over ***CW*** modulation. They are:

1) The transmitted power can be concentrated into short bursts of pulses.

2) The time intervals between pulses (the off time) can be filled with samples from other messages.

3.2.1 Sampling theorem:

The sampling theorem states that, if the sampling rate, f_s, in any pulse modulation system exceeds twice the maximum modulating signal frequency, the original modulating signal can be retrieved at the receiver with minimum distortion. If a message with maximum frequency, f_m, is to be transmitted as pulses, then:

$$f_s \geq 2f_m \quad \text{.....(3.27)}$$

For example, a sampling rate of 8000 samples/sec is normally used to sample the speech signal which its frequency band is ranging between 300 and 3400HZ. A simple approach to sampling theory is via the switching operation shown in Fig. 3.32a. Fig. 3.32b is a simple electronic circuit that serves as a sampler. Notice that the output signal $X_S(t)$ is a stream of short segments of the input signal $X(t)$ as illustrated in Fig. 3.32c.

The minimum sampling rate is called ***"Nyquist rate"*** and it is $f_s = 2f_m$. When a signal is sampled with a sampling rate as in eq. 3.27 and $X_S(t)$ is filtered at the receiver by an ideal LPF, the output signal will be proportional to $X(t)$. Thus, the original message is reconstructed by low pass filtering the signal $X_S(t)$. The duration of the samples; τ is very short, so that $X_S(t)$ approaches a string of instantaneous sample points which corresponds to ideal sampling.

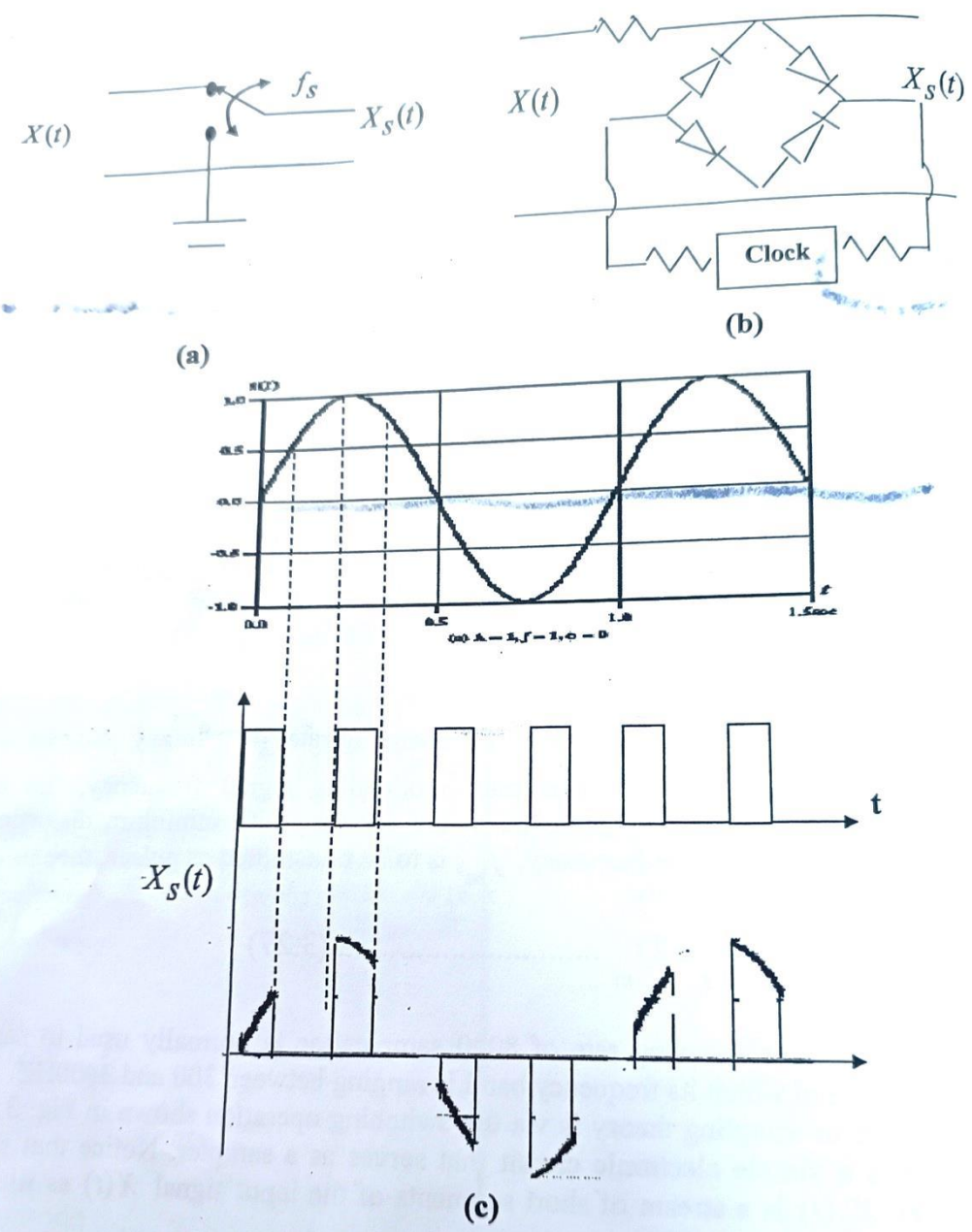

Fig. 3.32: A Switching Sampler (PAM wave).

Fig.3.33 depicts the amplitude-frequency spectrum for ***a sampled message***. Note that when $f_s > 2f_m$ the modulating signal can be recovered by low pass filtering $X_S(t)$.

If the sampling rate is less than twice the frequency of the modulating signal, i.e., $f_s < 2f_m$, then the recovered signal is distorted and is not similar to the original message since the sidebands of the adjacent harmonics of f_s overlap. The last condition is referred to as ***"Aliasing"***.

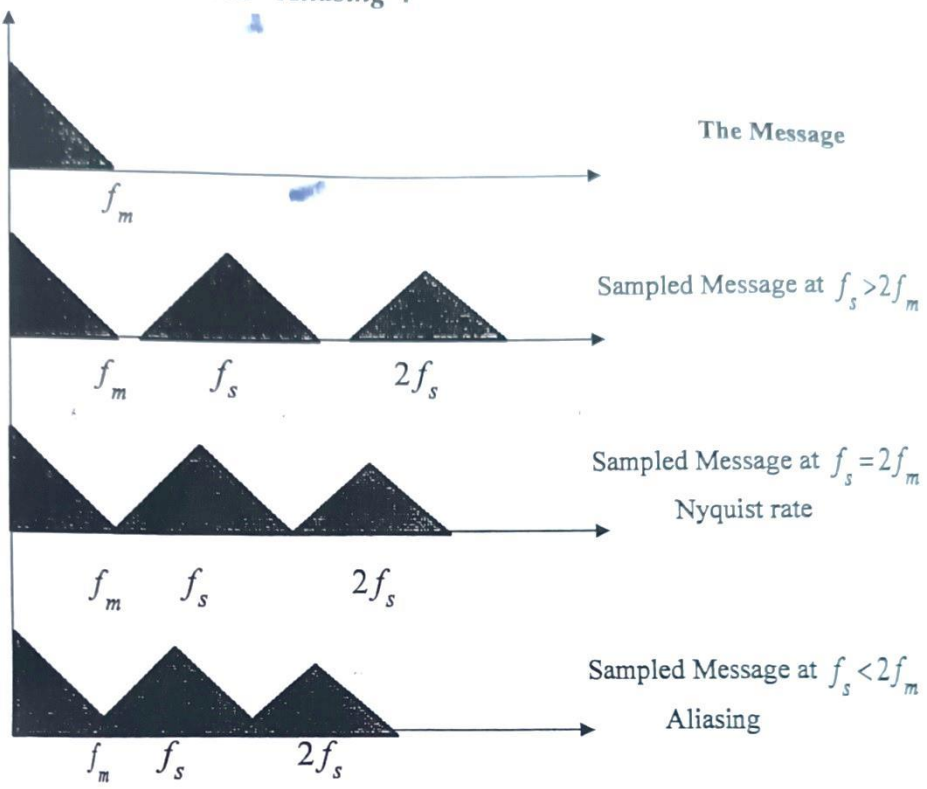

Fig.3.33: Amplitude-Frequency spectrum for Switching Sampling.

3.2.2: Analogue Pulse Modulation; PAM, PDM, and PPM:

The three types of ***Analogue Pulse Modulation*** are:

1) PAM; Pulse Amplitude Modulation.

2) PDM or PWM; Pulse Duration or Width Modulation.

3) PPM; Pulse Position Modulation.

Fig.3.34 shows waveforms of a typical message and the corresponding three types of ***Analogue Pulse Modulation***. The methods of producing these types are also illustrated. As it is clear, the amplitude, the duration, and the position of the pulses are varied in direct proportion to the message signal.

Note that the ***PDM, PPM*** modulator employs a comparator and a saw tooth wave generator with period T_s. The output is zero except when the value of the message waveform $X(t)$ exceeds the value of the saw tooth wave at which the output goes to a positive value; A, see Fig. 3.35

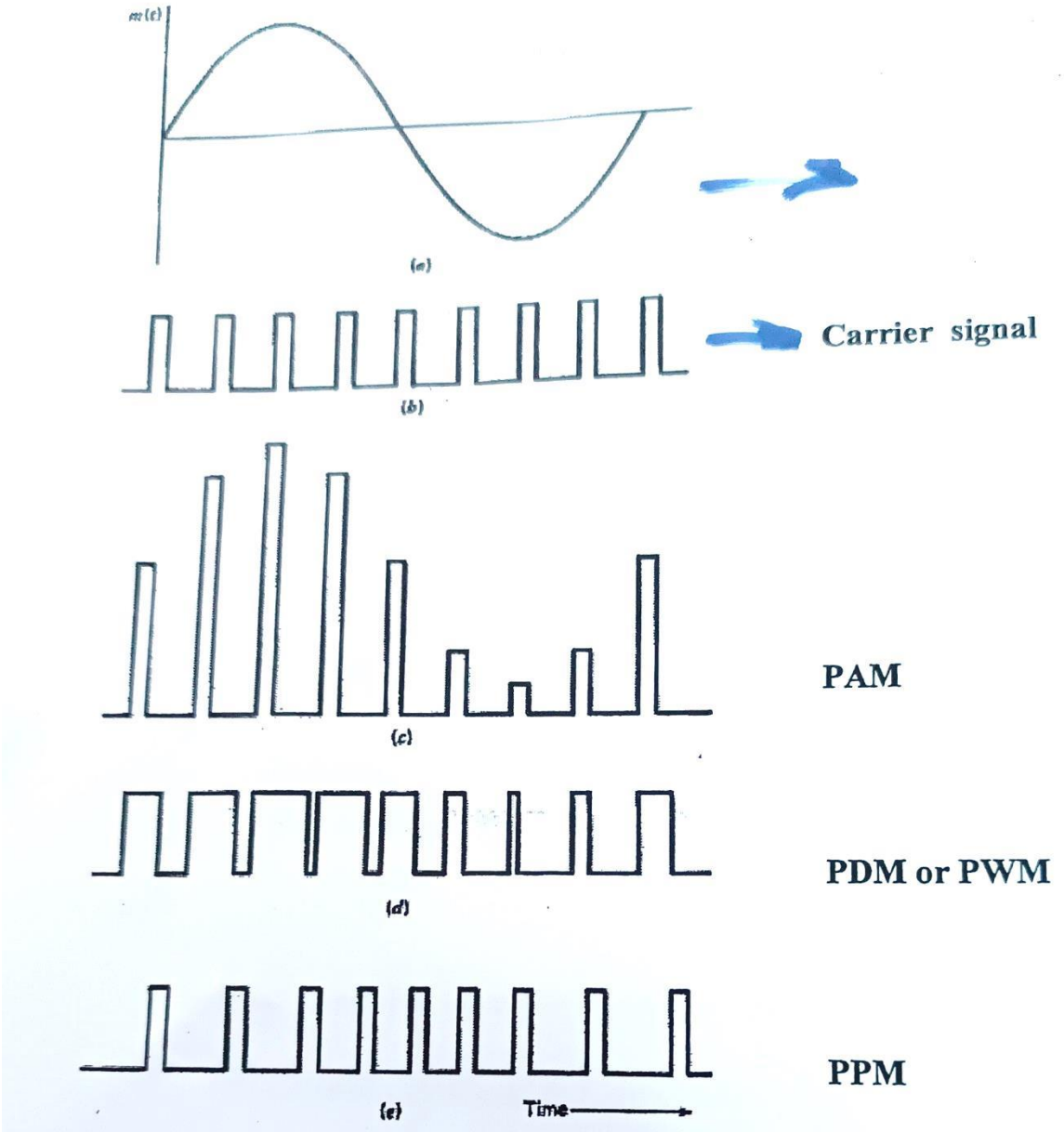

Figure 3.35: Types of Pulse Modulations

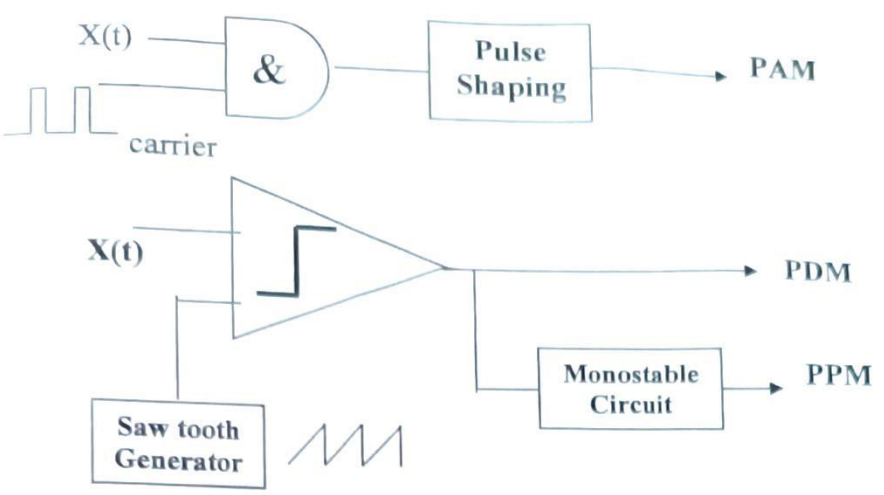

Fig.3.34: Types of Analogue Pulse Modulation and their corresponding modulators.

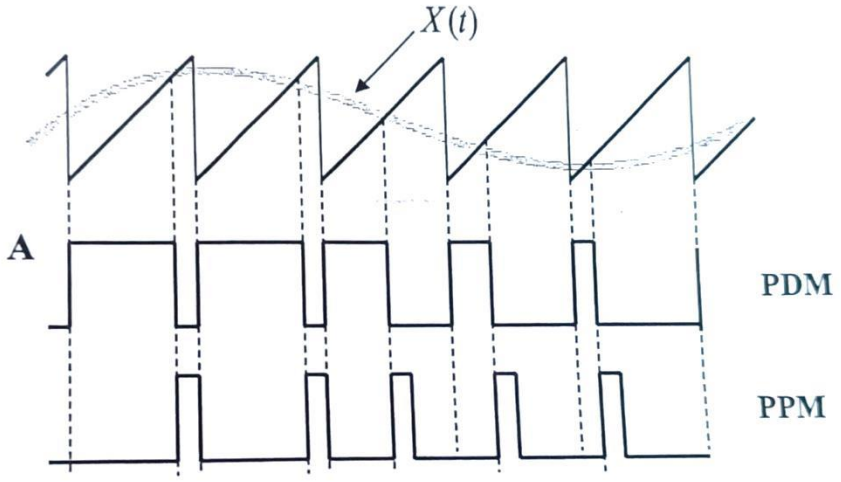

Fig. 3.35: PDM & PPM waveforms.

Note that, from the waveform of ***PDM*** in Fig.3.35, the pulse duration or the pulse width is varied according to the modulating signal $X(t)$. In ***PPM***, the position of the pulse is shifted forward or backward in accordance with the modulating signal. In both types, the amplitude of the pulse is kept unchanged.

Recovering $X(t)$ from ***PAM*** signal is shown as block diagram in Fig. 3.36a. It consists of ***Low Pass Filter*** stage followed by an ***Equalizer***. Fig.3.36b shows the demodulation process of $X(t)$ from ***PDM*** by ***Low Pass Filter*** with a ***DC block***. Finally, the ***PPM*** signal is first converted to ***PDM*** signal then this signal is ***Low Pass Filtered*** to produce $X(t)$ as shown in Fig.3.36c.

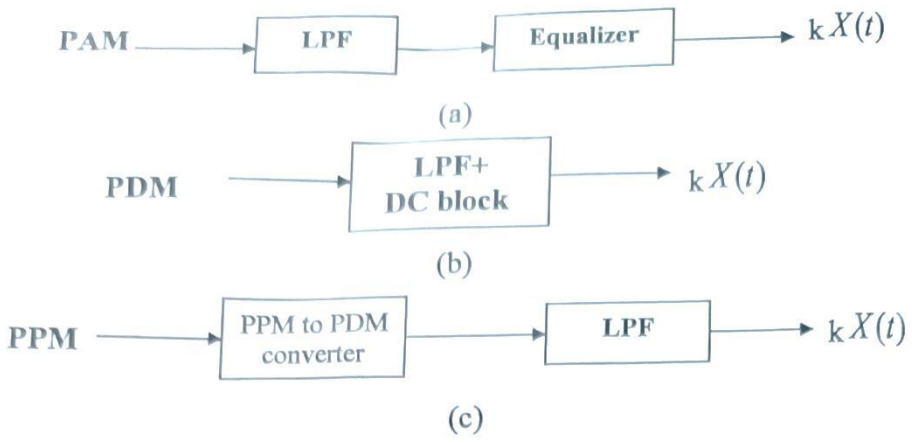

Fig.3.36: Demodulators of PAM, PDM, and PPM.

The ability to use constant-amplitude pulses is a major advantage of pulse modulation, and since ***PAM*** does not utilize constant-amplitude pulses, it is infrequently used. When it is used, the pulses are used to frequency modulate the carrier.

PDM and ***PPM*** have the same advantage over ***PAM*** as the ***FM*** has over the ***AM***. In ***PDM*** and ***PPM***, the pulse amplitude remains constant, so that ***Amplitude Limiter*** can be used to provide a good degree of noise immunity.

PDM has a disadvantage when compared with ***PPM*** in that its pulses are of varying width and therefore of varying power content. On the other hand, ***PDM*** works if synchronization between transmitter and receiver fails whereas ***PPM*** does not.

3.2.3: Pulse-Code Modulation(PCM):

In common with the other forms of ***Pulse Modulation, Pulse-Code Modulation; PCM***, also uses the sampling technique, but it differs from the others in that it is a ***digital process***. That is, instead of sending a pulse train capable of continuously varying one of the parameters, the ***PCM*** generator produces a series of numbers, or ***digits***. In PCM, the message is represented by coded group of digital pulses. The modulating signal $X(t)$ is first Low Pass Filtered (why?) and sampled to give $X_s(t)$. The samples are then quantized to the nearest predetermined discrete values at the ***Quantizer stage***. The quantized samples $X_{sq}(t)$ are then encoded to digital words. The elements of ***PCM*** generation are diagrammed in Fig. 3.37 which, viewed in another light, is ***Analogue-to-Digital converter (A/D)***.

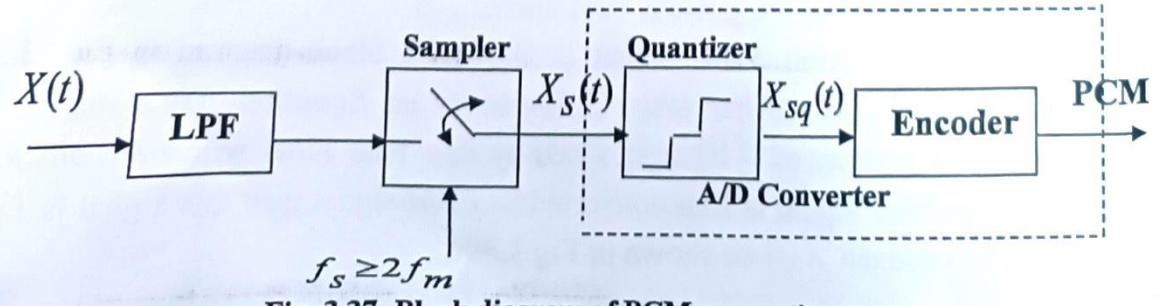

Fig. 3.37: Block diagram of PCM generation system.

In the ***Quantizer*** unit, the total amplitude range which the signal may occupy is divided into a number of standard levels. Since these levels are transmitted in binary code, the actual number of levels is ***a power of 2***. Thus, if the ***Quantizer*** has Q levels and the number of bits in each digital word is v, then for binary ***PCM***:

$$Q = 2^v \quad \ldots\ldots\ldots\ldots\ldots\ldots (3.28)$$

And the PCM bandwidth will be:

$$(B.W)_{PCM} = v f_m \quad \ldots\ldots\ldots\ldots\ldots\ldots (3.29)$$

For the analogue signal shown in Fig.3.38 which is limited in its excursions to the range of -4 to +4 volts, a quantizer with eight levels must be used in order that the sampled values can be converted to digital words each one consists of three bits. The quantization levels are located at -3.5, -2.5, -1.5... and +3.5 volts and the code numbers 0, 1, 2... and 7 are assigned to these levels respectively.

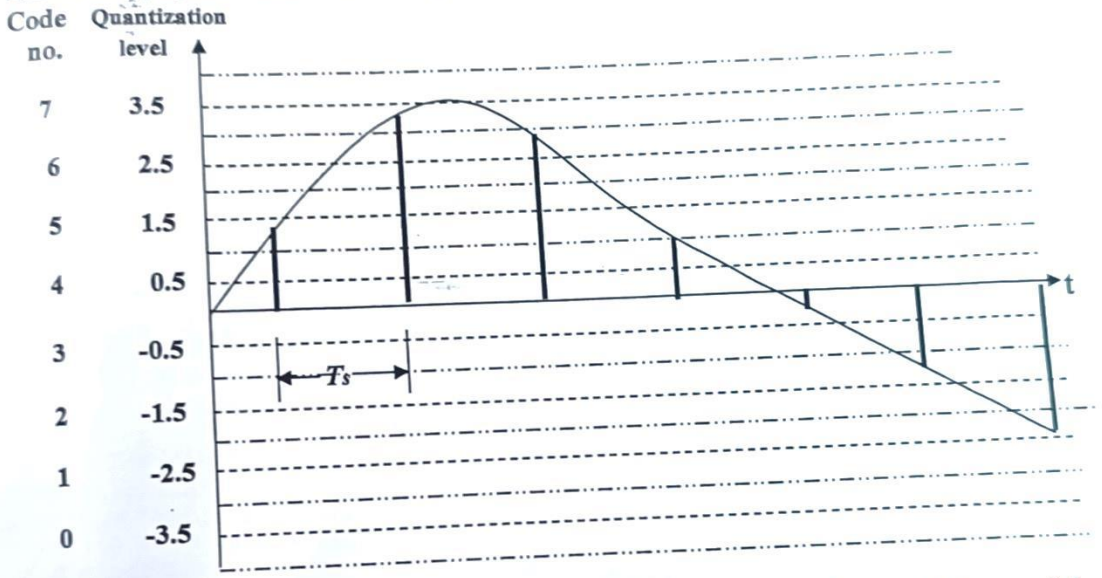

Sample values	1.3	3.3	2.8	1	-0.25	-1.25	-2.4
Nearest quantization level	1.5	3.5	2.5	1.5	-0.5	-1.5	-2.5
Code number	5	7	6	5	3	2	1
Binary representation	101	111	110	101	011	010	001

Fig.3.38: A message $X(t)$ is sampled, quantized, and then encoded to digital words to proc PCM signal.

Thus, the transmitted ***PCM*** for the signal $X(t)$ shown in Fig. 3.38 will be:

101111110101011010001

For speech signal, $v=7$ and Q=128 are normally used while for video signals $v=8$ and Q= 256 are used. Fig.3.39 depicts the receiver system of ***PCM***. Note that the input to the receiver is PCM plus quantization noise and channel noise. These two types of noise are removed in the PCM reconstruction unit, then the coded- pulses are decoded to the original sampled pulses in the ***Digital-to-Analogue D/A*** unit. The output of ***D/A*** stage is then Low Pass Filtered to recover the original message $X(t)$.

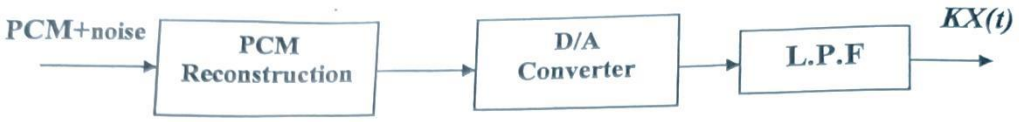

Fig.3.39: A block diagram of PCM receiver.

Solved problems

P3.9) Find the bandwidth of a PCM system used to transmit speech signal sampled at $f_s = 8000HZ$ and each sample is encoded into 7 binary digits.

Solution:

$v=7$ as given

$\therefore Q=2^7=128$ Levels

$$\therefore (B.W)_{PCM}=v\times f_m=v\times\frac{f_s}{2}=7\times\frac{8000}{2}=28KHZ$$

P3.10) A speech signal is transmitted using PCM with sampling rate $f_s = 8000HZ$ and quantization levels Q = 32. Find the bit rate in bits/sec. & the bandwidth required to transmit the code over AM channel.

Solution:

Since $Q=32$ as given, then

$Q=2^v \Rightarrow 32=2^v \Rightarrow 2^5=2^v$

$\therefore v=5$ i.e. each pulse is encoded into 5 bits. Then

$$T_S=\frac{1}{f_s}=\frac{1}{8000}=125\mu s$$

$\therefore$ The time occupied by each bit is $t_b=\frac{125\times10^{-6}}{5}=25\mu s$

The student should change a parameter specified in the code to get the following plots:

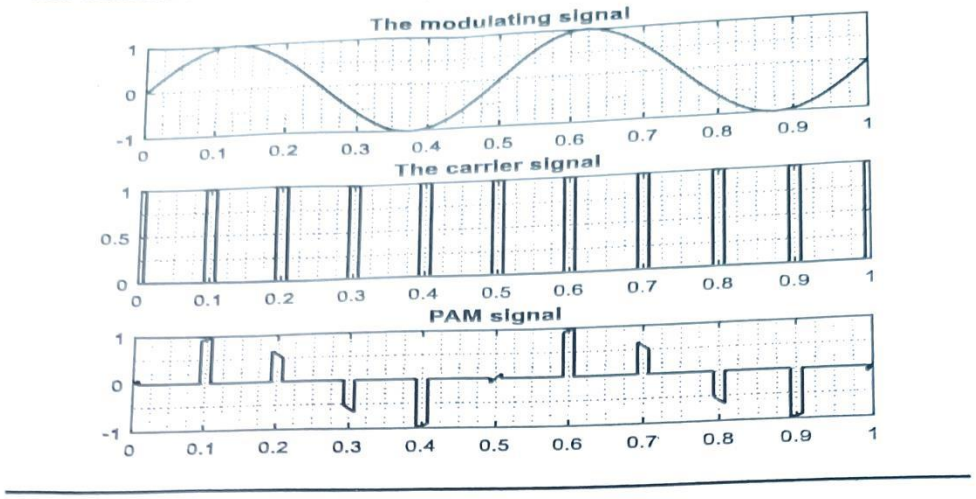

Homework:

1) If the quantization levels Q in the solved problem (3.10) is changed to 128 and f_s is unchanged. What will be the new bit rate? And what will be the bandwidth required to transmit the speech signal over the same AM channel?

3.3 Multiplexing:

Multiplexing is the process of transmitting several messages on one transmission media. There are two basic multiplexing techniques:

3.3.1 Frequency-Division Multiplexing (FDM):

Frequency-Division Multiplexing (FDM) is produced by superposition (addition) of "N" messages separated in frequency (see Fig. 3.40). Thus, the available channel bandwidth is divided into a number of non-overlapped ***"Slots"*** and each message is assigned to a slot of frequencies. ***FDM*** is used in long distance telephone, FM stereo and TV broadcasting, and other applications.

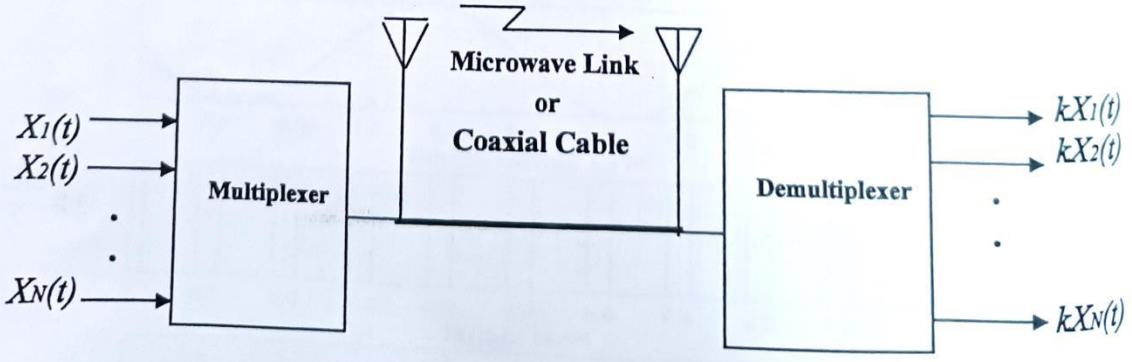

Fig.3.40: Illustration of FDM.

The block diagram of ***FDM*** technique is shown in Fig.3.41, where several input messages ($X_1, X_2 \ldots X_N$) individually modulate sub-carriers $f_{c1}, f_{c2}, \ldots$ and, f_{cN} after being passed through Low Pass Filter. The sub-carriers are modulated as ***DSB*** or ***SSB***, then the outputs of the modulators are summed to produce the base band signal; $X_b(t)$. Finally, $X_b(t)$ modulates a master oscillator.

Demodulation of ***FDM*** is accomplished in three steps, see Fig.3.42. The first demodulator recovers the base band signal $X_b(t)$ from the modulated master carrier, then this base band signal is passed through bank of ***Band Pass Filters*** to retrieve the individual modulated sub-carriers. Finally, each message is recovered from the corresponding modulated sub-carrier by using product demodulator or phase shift demodulators.

The major practical problem of ***FDM*** is the ***Crosstalk***; the unwanted coupling of one message into another. To reduce the effect of this problem, the modulated messages spectra are spaced out in frequency by the ***Guard band "W"***.

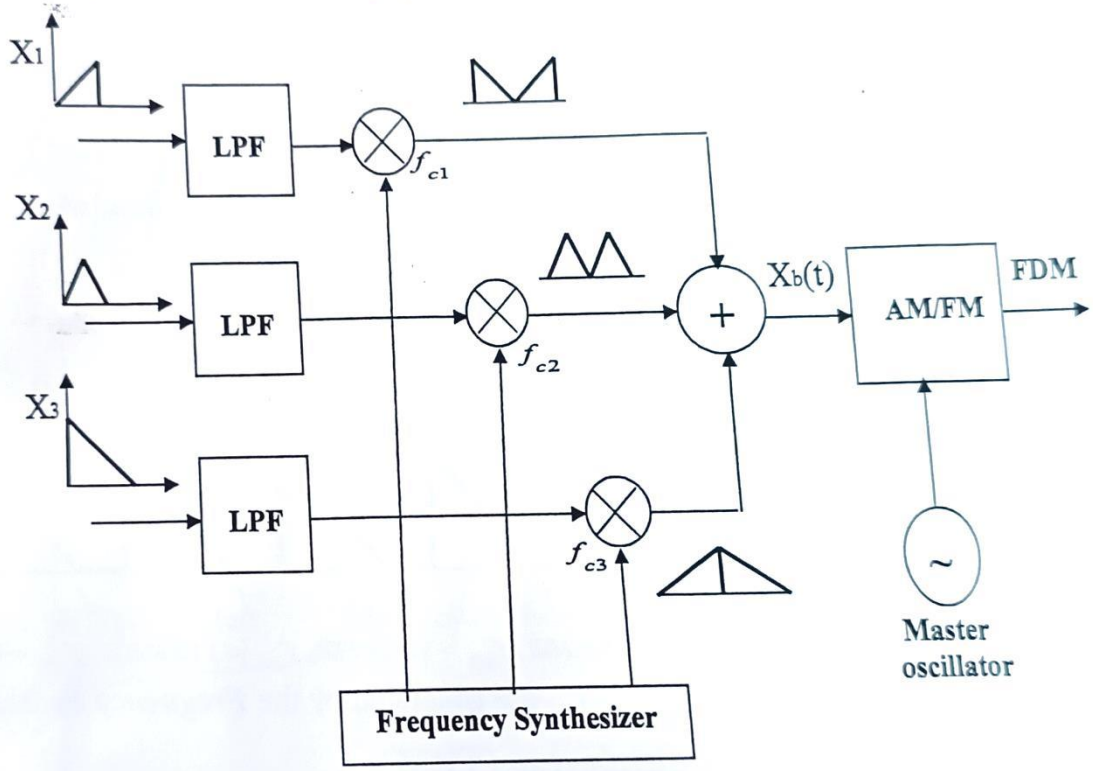

(a)

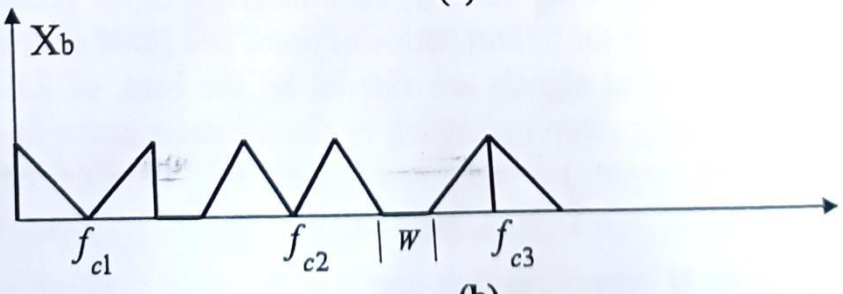

(b)

Fig.3.41: Typical FDM transmitter. (a) Block diagram. (b) Base band spectrum.

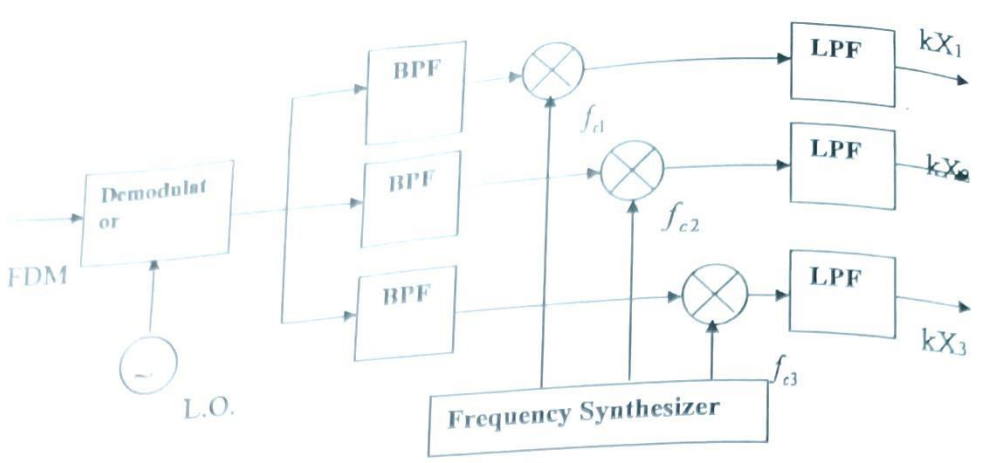

Fig.3.42: Block diagram of typical FDM receiver.

Example:

Five signal each is band limited to 3KHZ are to be FDMed with 1KHZ guard band (W=1KHZ). The subscriber modulation is SSB and $f_{c1}=100KHZ$. Sketch the spectrum of base band signal and calculate the required bandwidth.

Solution:

$$(B.W)_T=(B_o+W)\times N=(3+1)\times 5=20KHZ$$

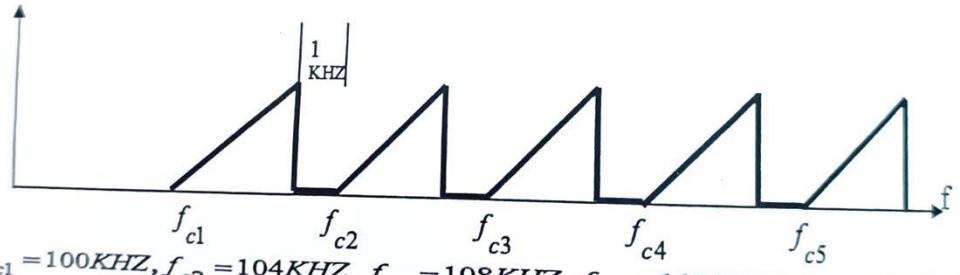

$$f_{c1}=100KHZ, f_{c2}=104KHZ, f_{c3}=108KHZ, f_{c4}=112KHZ, f_{c5}=116KHZ$$

The subcarriers $f_{c1}, f_{c2}, f_{c3}, f_{c4}, f_{c5}$ are generated by the ***Frequency Synthesizer***.

3.3.2 Time-Division Multiplexing (TDM):

In ***Time Division Multiplexing (TDM)***, each message signal occupies the channel (e.g., a ***transmission line***) for a short period of time. The ***TDM*** system is illustrated in Figure 3.43. Several input signals are filtered by the bank of ***LPFs*** and sampled sequentially. The rotating sampling switch or ***Commutator*** at the transmitter extracts one sample of each input per one revolution. The time of one revolution is $T_S \le (1/2B)$ seconds where B is the pass band of the ***LPFs***. Hence, the output of the ***Commutator*** is a ***PAM*** waveform that contains the individual samples periodically interlaced in time. A similar rotary switch at the receiver; a ***Decommutator*** or ***Distributor***, separates the samples and distributes them to another bank of ***LPFs*** for the reconstruction of individual messages.

The time interval T_S containing all samples with each sample corresponds to each input is called a ***frame***. If there are M input channels, the pulse-to-pulse spacing within a ***frame*** is $T_S / M = 1/Mf_s$ (see Figure 3.44). Thus, the total number of pulses per second will be

$$r = Mf_s \qquad pulses/\sec \ldots\ldots\ldots\ldots\ldots\ldots (3.30)$$

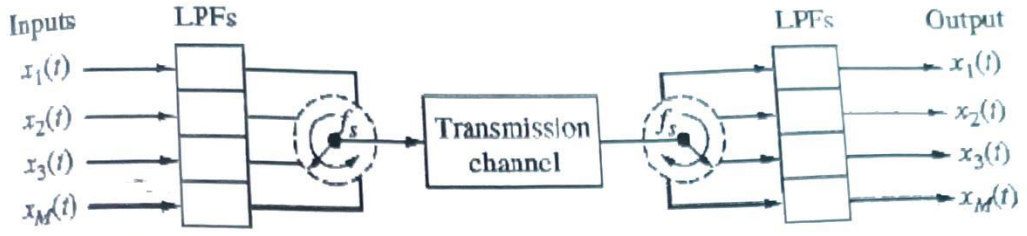

Fig. 3.43: Block diagram of TDM system.

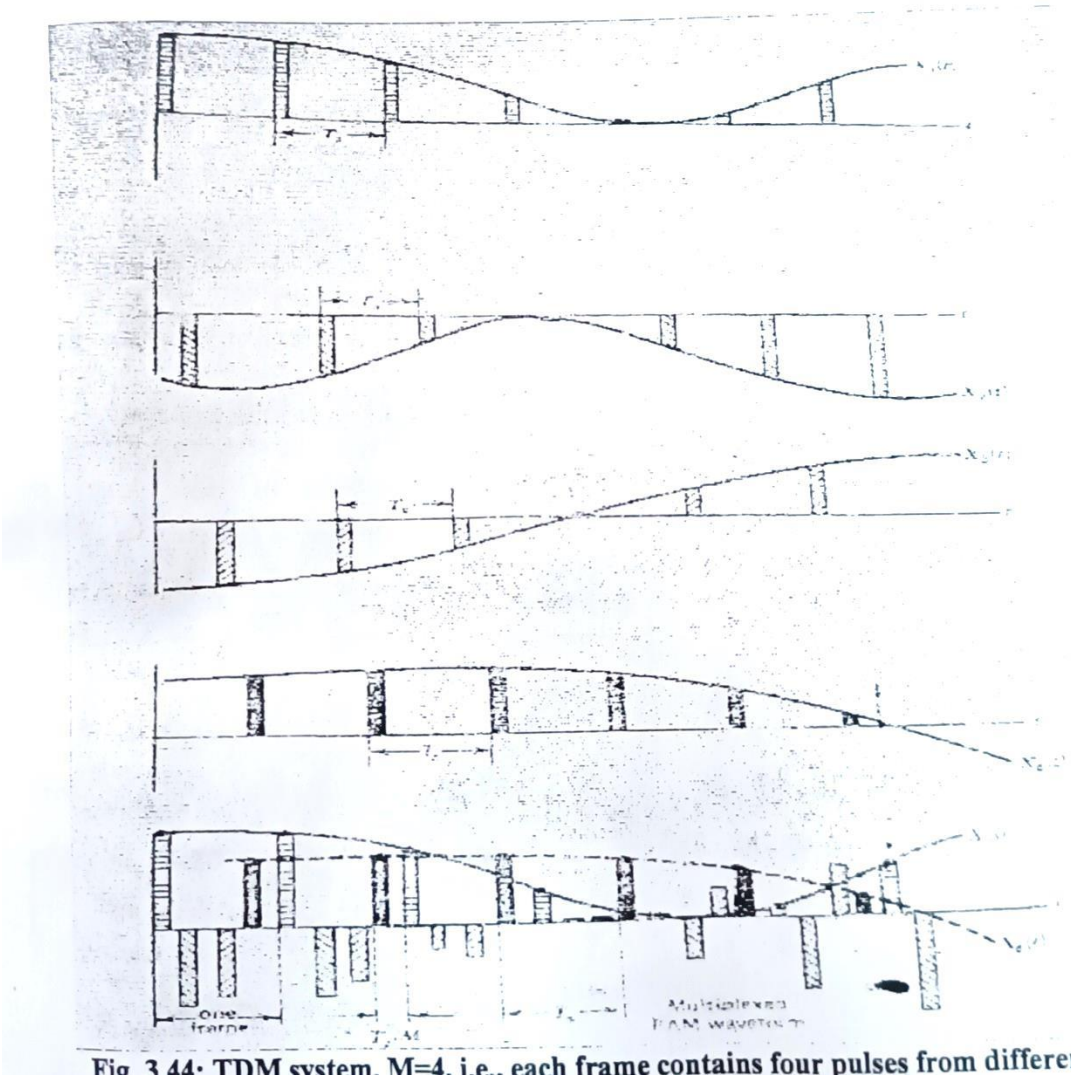

Fig. 3.44: TDM system, M=4, i.e., each frame contains four pulses from different sources.

As can be seen from Fig. 3.44, the period between successive pulses is $T_s/M = 1/Mf_s$.

The interlaced sequence of samples may be transmitted by ***PAM*** directly or quantized and then transmitted as ***PCM***. ***TDM-PCM*** is used in a variety of applications. The most important one is the ***PCM telephone system***, where the speech and other information signals are multiplexed and transmitted over several of transmission media such as pair of wires, wave guide, and optical fibres.

Example:
If a carrier telephone system has to transmit 12/ 4KHZ channels. Find the number of pulses/sec if TDM-PAM system is used. An extra pulse is required for a frame.

Solution:

$Number\ of\ pulses/\ frame = 12+1 = 13\ pulse$

$f_s = 2f_m = 2\times 4 = 8KHZ$

$\therefore Number\ of\ pulses/\text{sec}\ or\ pulse\ rate\ of\ TDM-PAM$

$r = Mf_s = 13\times 8 = 104$ Kpulse/sec

3.4 Digital Modulation:

Data communications becomes important with the expansion of the use of computers and data processing and have continued to develop into a major industry providing the interconnection of computer networks and transmission of data between distant sites.

Digital information can modulate the amplitude, frequency, and phase of a sinusoidal carrier wave. Therefore, in digital modulation, the information is in digital form while the carrier is continuous form.

3.4.1 Amplitude Shift Keying (ASK) or ON-OFF Keying (OOK):

In this method, the binary information switches the carrier between two states; ***ON*** or ***OFF***, see Figure 3.46. The resultant waveform consists of "***ON***" mark pulses representing binary "1" and "***OFF***" space pulses representing binary "0". The *ASK* modulator and demodulator is shown in Fig.3.45.

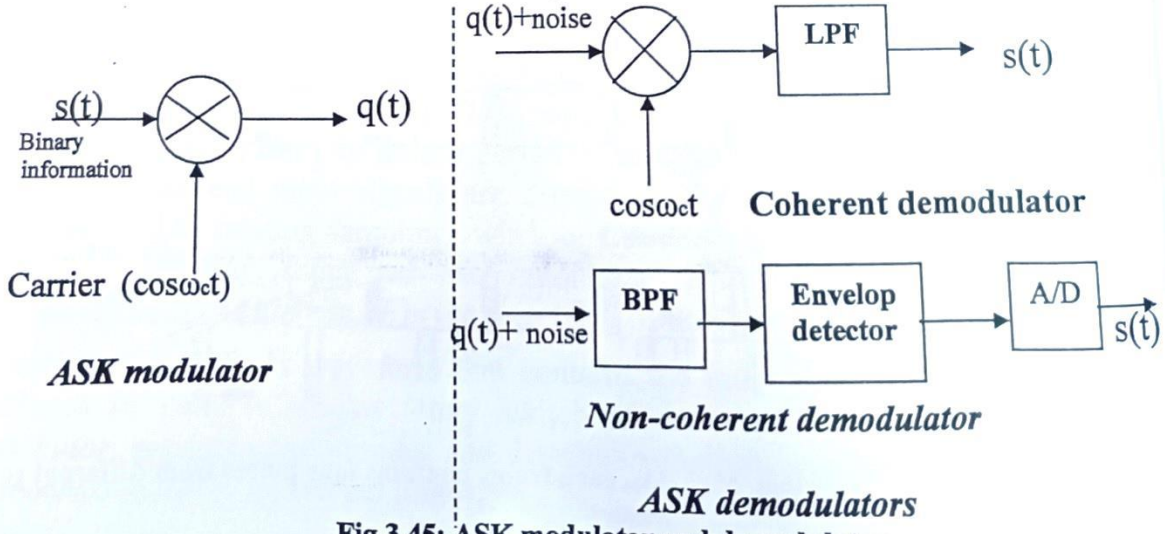

Fig.3.45: ASK modulator and demodulator.

The ASK signal; q(t), is expressed mathematically as:

$$q(t)=S(t)\times\cos\omega_c t=\begin{cases}\cos\omega_c t & \text{logic 1}\\ 0 & \text{logic 0}\end{cases}\qquad\ldots\ldots\ldots\ldots(3.31)$$

3.4.2: Frequency Shift Keying (FSK):

In this modulation type, the binary information deviates the frequency of the carrier into two values; $f_1=f_c+\Delta f$ when the information is logic "1" and $f_2=f_c-\Delta f$ when the information is logic "0". Thus, the ***FSK*** is considered as the addition of two ***ASK*** signals, see Figure 3.46. The expression for ***FSK*** is:

$$q(t)=\cos\omega_i t=\begin{cases}\cos\omega_1 t=\cos(\omega_c+\Delta\omega)t & \text{logic 1}\\ \cos\omega_2 t=\cos(\omega_c-\Delta\omega)t & \text{logic 0}\end{cases}\qquad\ldots\ldots\ldots(3.32)$$

$i=1,2$

The modulator and demodulator of ***FSK*** are shown in Figure 3.47.

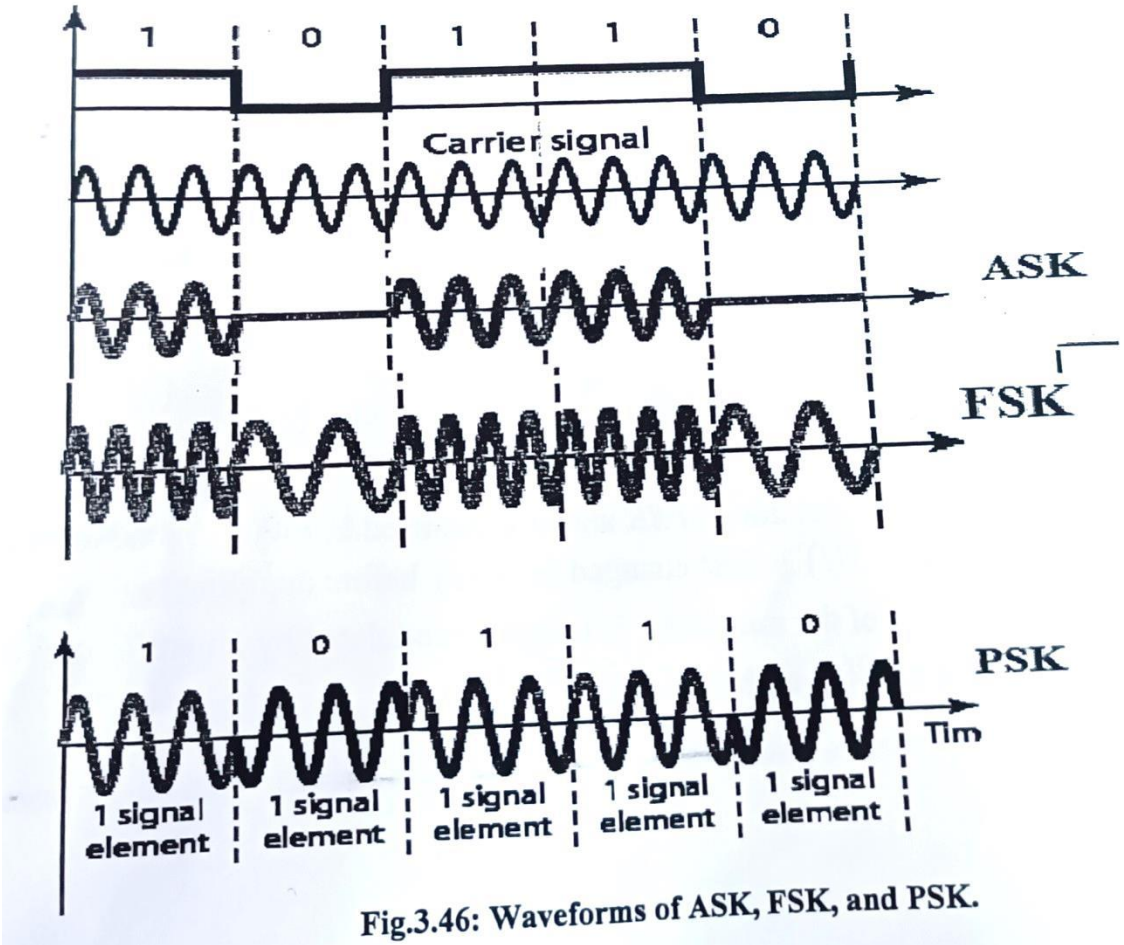

Fig.3.46: Waveforms of ASK, FSK, and PSK.

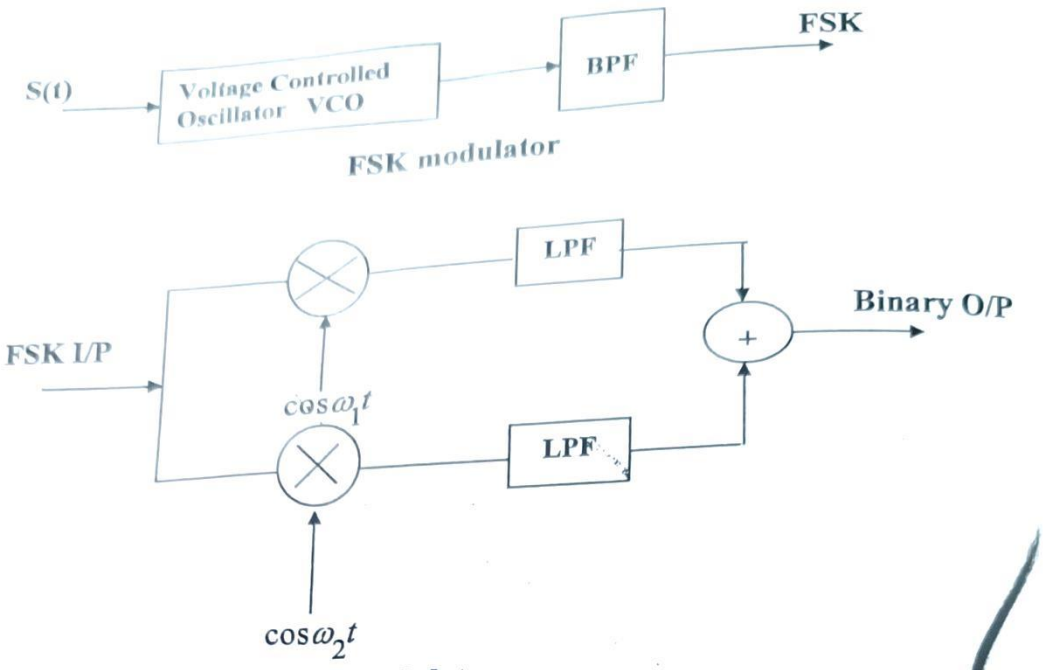

Fig.3.47: Modulator and demodulator of FSK signal.

3.4.3: Phase Shift Keying (PSK):

In this method of digital modulation, the binary information alters the phase of th carrier to 180°(the negative version) when the information is binary "0", while th logic"1" information keeps the phase of the carrier unchanged, see Figure 3.46. Th ***PSK*** expression is:

$$q(t)=\cos(\omega_c t+\varphi)=\begin{cases}\cos(\omega_c t+0^\circ)=\cos\omega_c t & \text{logic 1}\\ \cos(\omega_c t+180^\circ)=-\cos\omega_c t & \text{logic 0}\end{cases}\quad\ldots\ldots(3.33)$$

The modulator and demodulator of ***PSK*** signal is depicted in Figure 3.48. Note that the binary information $S(t)$ is first changed to $S'(t)$ before applying to the modulator. The output of the modulator is a carrier modulated by , therefore, $S'(t)$ must be re-changed to $S(t)$ at the receiver.

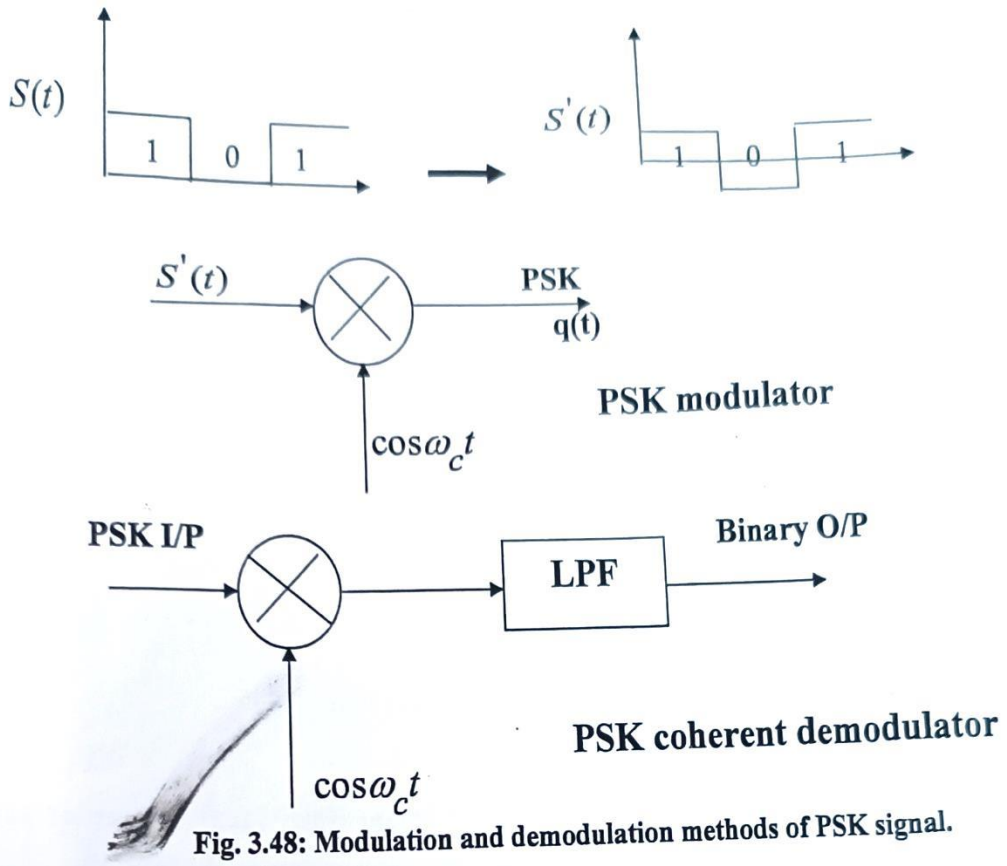

Fig. 3.48: Modulation and demodulation methods of PSK signal.

In four-phase ***PSK*** (also called ***Quadrature PSK, QPSK***), one of four possible waveforms is transmitted during each signaling interval. These waveforms are:

$q_1(t) = A\cos\omega_c t$ $\varphi = 0°$

$q_2(t) = -A\sin\omega_c t$ $\varphi = 90°$

$q_3(t) = -A\cos\omega_c t$ $\varphi = 180°$

$q_4(t) = A\sin\omega_c t$ $\varphi = 270°$

For speech signal, $v=7$ and Q=128 are normally used while for video signals $v=8$ and Q= 256 are used. Fig.3.39 depicts the receiver system of ***PCM***. Note that the input to the receiver is PCM plus quantization noise and channel noise. These two types of noise are removed in the PCM reconstruction unit, then the coded- pulses are decoded to the original sampled pulses in the ***Digital-to-Analogue D/A*** unit. The output of ***D/A*** stage is then Low Pass Filtered to recover the original message $X(t)$.

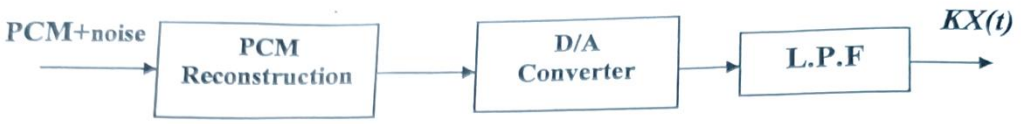

Fig.3.39: A block diagram of PCM receiver.

Solved problems

P3.9) Find the bandwidth of a PCM system used to transmit speech signal sampled at $f_s = 8000HZ$ and each sample is encoded into 7 binary digits.

Solution:

$v=7$ as given

$\therefore Q=2^7=128$ Levels

$$\therefore (B.W)_{PCM}=v\times f_m=v\times\frac{f_s}{2}=7\times\frac{8000}{2}=28KHZ$$

P3.10) A speech signal is transmitted using PCM with sampling rate $f_s = 8000HZ$ and quantization levels Q = 32. Find the bit rate in bits/sec. & the bandwidth required to transmit the code over AM channel.

Solution:

Since $Q=32$ as given, then

$Q=2^v \Rightarrow 32=2^v \Rightarrow 2^5=2^v$

$\therefore v=5$ i.e. each pulse is encoded into 5 bits. Then

$$T_S=\frac{1}{f_s}=\frac{1}{8000}=125\mu s$$

$\therefore$ The time occupied by each bit is $t_b=\frac{125\times10^{-6}}{5}=25\mu s$